Installation Guide
Linear Rotary Motors

ENG

PR01-52-SSCH

Content

1 General Information ... 4
1.1 Introduction ... 4
1.2 Explanation of Symbols ... 4
1.3 Qualified Personnel ... 4
1.4 Liability ... 4
1.5 Copyright ... 4
2 Safety Instructions ... 5
3 Intended Use ... 7
3.1 Designation Code PR01-52-SSCH Linear Rotary Motors ... 7
3.2 Linear Rotary Motor ... 7
3.3 Internal Mechanical Stops ... 8
3.4 Max. Speed ... 8
3.5 Option Load Compensation MagSpring® ... 8
3.6 Stainless Steel Housing (SSCH) ... 8
4 Installation Instructions ... 9
4.1 Operating Conditions ... 9
4.2 Installation Options ... 9
4.2.1 Vertical Installation ... 10
4.2.2 Horizontal installation ... 11
4.3 Mounting the Load on the Shaft ... 12
4.3.1 Feather Key ... 12
4.3.2 Shaft-Hub Clamping ... 12
4.4 Material Data ... 13
5 Connections ... 13
5.1 Motor Cable ... 13
5.1.1 Technical Data ... 13
5.2 Connector Wiring Linear Motor ... 14
5.3 Connector Wiring Rotary Motor ... 14
5.4 Connecting the Drive to the Motor ... 15
5.5 Pneumatic Air Connection ... 15
6 Start-up ... 16
6.1 Linear Motor and Rotary Motor ... 16
6.2 Default Values of the Coordinate System ... 16
6.2.1 Angle of Rotation ... 16
6.2.2 Position ... 16
6.3 Plug and Play Function for Linear Rotary Motors ... 16
6.4 Setting Motor Parameters ... 16
6.4.1 Selection of the Motor Data Files ... 17
6.4.2 Application-specific Parameters ... 17
6.4.3 Inverting the Coordinate System ... 17
6.4.4 Selection of the Linear and Rotary Unit System ... 19
6.4.5 Referencing the Linear Motor ... 19

6.4.6 Referencing the Rotary Motor ... 20
6.5 Magnetic Spring MagSpring® ... 20
6.5.1 Force Direction ... 20
7 Accessories ... 21
7.1 Motor Cable ... 21
7.1.1 Linear Motor / Rotary Motor ... 21
7.2 Shaft-Hub Clamping ... 22
7.2.1 Dimensions and Technical Data ... 22
7.2.2 Mounting ... 22
8 Maintenance and Test Instructions ... 23
8.1 Maintenance ... 23
8.1.1 Preventive Inspection every 6'000h ... 23
8.1.2 Needs-based maintenance ... 23
8.1.3 Lubrication Specification ... 24
8.2 Electrical Resistance Test ... 24
8.2.1 Linear Motor PS01-37x120F-HP-R ... 24
8.2.2 Rotary Motor Stator RS01-52x60-R ... 24
9 Transport and Storage ... 24
10 Dimensions ... 25
10.1 PR01-52x60-R/37x120F-HP-R-110-(L)_MS(xx)_SSCH ... 25
11 International Certificates International Certificates ... 26
11.1 EU Declaration of Conformity CE-Marking ... 27
11.2 UK Declaration of Conformity UKCA-Marking ... 28
11.3 CB Test Certificate ... 29
11.4 UL Certificate ... 30

1 General Information

1.1 Introduction

This manual includes instructions for the assembly, installation, maintenance, transport, and storage of linear rotary motors. The document is intended for electricians, mechanics, service technicians, and warehouse staff.
Read this manual before using the product and observe the general safety instructions and those in the relevant section at all times.
Keep these operating instructions in an accessible place and make them available to the personnel assigned.

1.2 Explanation of Symbols

Triangular warning signs warn of danger.

Round command symbols tell what to do.

1.3 Qualified Personnel

All work such as installation, commissioning, operation and service of the product may only be carried out by qualified personnel.
The personnel must have the necessary qualifications for the corresponding activity and be familiar with the installation, commissioning, operation and service of the product. The manual and in particular the safety instructions must be carefully read, understood and observed.

1.4 Liability

NTI AG (as manufacturer of LinMot and MagSpring products) excludes all liability for damages and expenses caused by incorrect use of the products. This also applies to false applications, which are caused by NTI AG's own data and notes, for example in the course of sales, support or application activities. It is the responsibility of the user to check the data and information provided by NTI AG for correct applicability in terms of safety. In addition, the entire responsibility for safety-related product functionality lies exclusively with the user.Product warranties are void if products are used with stators, sliders, servo drives or cables not manufactured by NTI AG unless such use was specifically approved by NTI AG.
NTI AG’s warranty is limited to repair or replacement as stated in our standard warranty policy as described in our "terms and conditions" previously supplied to the purchaser of our equipment (please request copy of same if not otherwise available). Further reference is made to our general terms and conditions.

1.5 Copyright

This work is protected by copyright.
Under the copyright laws, this publication may not be reproduced or transmitted in any form, electronic or mechanical, including photocopying, recording, microfilm, storing in an information retrieval system, not even for training purposes, or translating, in whole or in part, without the prior written consent of NTI AG.
LinMot® is a registered trademark of NTI AG.

2 Safety Instructions

Pacemaker / Implanted heart defibrillator
Sliders could affect the functioning of pacemakers and implanted heart defibrillators. For the duration of a strong approach to a magnetic field, these devices switch into test mode and will not function properly.

- If you wear one of those devices keep a minimum distance of 300 mm (12") between the pacemaker / defibrillator and the housing of the linear rotary motor.
- Inform others who wear these devices to comply with this minimum distance!

Caution - Risk of Electric Shock !
Before working, make sure that there are no high voltages.

Fast-moving machine parts
The sliders of LinMot linear motors are fast-moving machine parts. All necessary precautions must be taken to prevent persons approaching the moving elements during operation (provide covers, guards, etc.).

Automatic restart
The motors can start automatically under certain cricumstances!
If necessary, a corresponding warning symbol must be provided and protection against entering the hazardous area or a suitable safe electronic disconnection must be provided!

Risk of injury due to a defect or fault
For areas where a defect or fault can result in substantial property damage or even serious personal injury, additional external precautions must be taken or devices must be installed to ensure safe operation even if a defect or fault occurs (eg. suitable safe electronic disconnection, mechanical interlocks, barriers, etc.).

Magnetic field
Magnets integrated in the sliders produce a strong magnetic field. They could damage TVs, laptops, computer hard drives, credit and ATM cards, data storage media, mechanical watches, hearing aids, and speakers.

- Keep magnets away from devices and objects that could be damaged by strong magnetic fields.
- For the above mentioned objects, keep a minimum distance as described in the "Pacemaker / implanted defibrillator" section.
- For non-anti-magnetic watches, keep the double minimum distance.

Burn hazard
The shaft of LinMot linear rotary motors can reach temperatures of 80 °C, which may cause burns upon contact.

Grounding
All metal parts that are exposed to contact during any user operation or servicing and likely to become energized shall be reliably connected to the means for grounding.

Effects on people
According to the current level of knowledge, magnetic fields of permanent magnets do not have a measurable positive or negative effect on people. It is unlikely that permanent magnets constitute a health risk, but it cannot be ruled out entirely.

- For your own safety, avoid constant contact with magnets.
- Store large magnets at least one meter away from your body.

Temperature resistance
Keep motors away from unshielded flame or heat.
Temperature above 120°C will cause demagnetization.

3 Intended Use

3.1 Designation Code PR01-52-SSCH Linear Rotary Motors

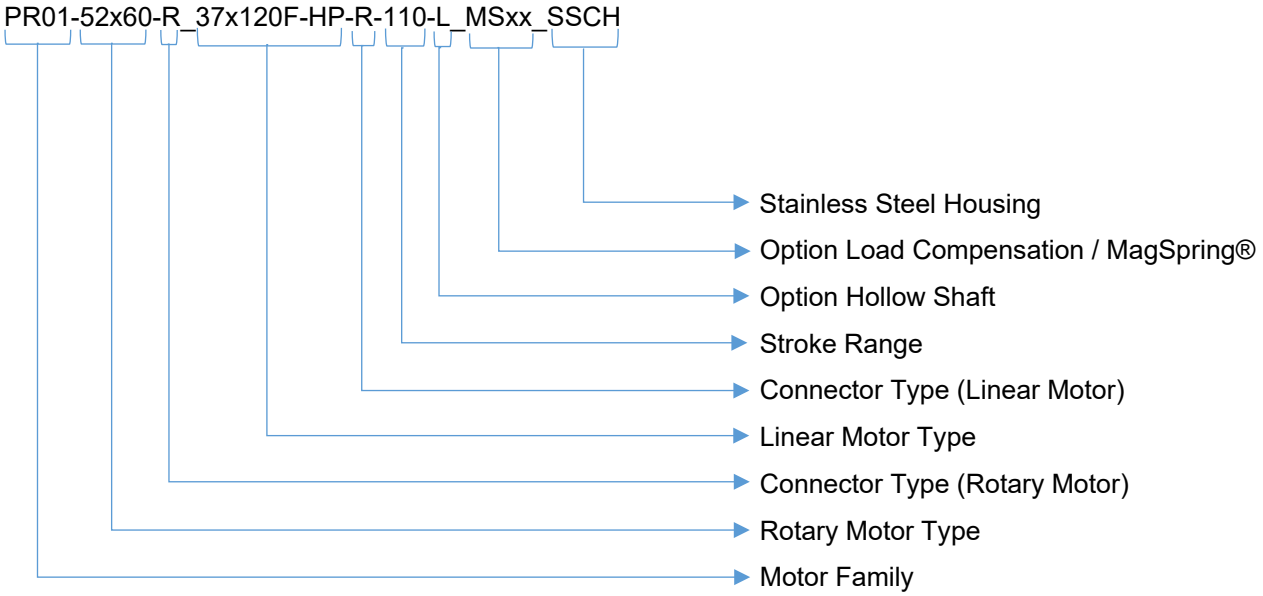

3.2 Linear Rotary Motor

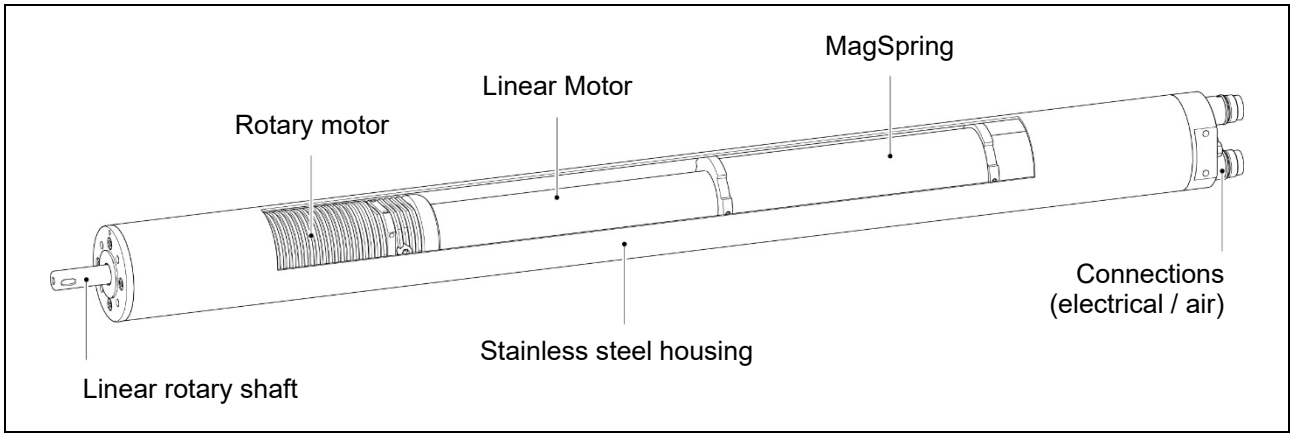

LinMot linear rotary motors are direct electric drives for use in industrial and commercial installations. For correct handling, observe the warnings listed in chap. 2. The motors are characterized by a slim design in which a linear and a rotary motor including the magnetic spring “MagSpring” are integrated in a common housing. This features a high-precision and complex mechanical system. The optimization of the internal moving load mass, as well as the moment of inertia, enables a dynamic movement of linear and rotating motion.

The linear rotary motor is designed for the simultaneous execution of linear and rotating movements. This means that the rotary and linear movements can be executed simultaneously and completely independently of each other. However, if the application permits, it is recommended to execute the rotary movement with the linear rotary shaft retracted, if possible. The rotary and linear movements should also be carried out one after the other. This reduces the bearing loads and achieves a longer service life of the linear rotary shaft.

By combining linear and rotary motion, highly complex motion patterns, such as those required in sealing and assembly applications, can be easily realized using LinMot linear rotary motors. In addition to the two motors and the magnetic spring, an optional air feed-through (hollow shaft) is also available.

3.3 Internal Mechanical Stops

Do not drive into the internal mechanical stops!
It must be ensured that the linear motor does not move to the lower or upper internal stop during operation, as otherwise the linear motor may be damaged! The internal stops may only be used for homing purposes. The homing speed must not exceed the value of 0.01 m/s.

3.4 Max. Speed

The mechanically maximum permissible speed of 1500 rpm must not be exceeded.

3.5 Option Load Compensation MagSpring®

The MagSpring option is a passive load compensation based on a magnetic spring with constant force over the functional stroke range that can be integrated into the module. MagSprings are available in various force levels and can either push or pull the linear rotary shaft. The MagSpring option can be used to compensate the load mass. With the correct design, the motor current and thus its power loss can be reduced, by using a MagSpring. This makes higher cycle rates possible.
If the MagSpring is sized properly, it can move the linear rotary shaft including the load mass into a collision-free zone in the event of current loss.

- Close to the stroke limit (idle state), the MagSpring has a reduced force to protect the linear rotary motor from mechanical shocks in case of malfunction/control (self-acceleration into mechanical stop).
- If the maximum defined stroke (see data sheet) is exceeded, the MagSpring function can no longer be guaranteed.
- The function of the MagSpring is affected by mechanical influences such as static and sliding friction. Depending on the operating conditions, it is not possible to guarantee complete retraction/extension of the linear rotary shaft, which is stimulated by the MagSpring and therefore passive.

3.6 Stainless Steel Housing (SSCH)

The PR01-52-SSCH linear rotary motors are encased in a stainless steel housing. As a result, these motors have a uniformly high IP protection rating (IP69s) and can withstand "in place" cleaning processes such as CIP and SIP. They are specially designed for the food or pharmaceutical & medical industry.

- The exact list of materials used can be found in chapter 4.4.
- The user is obliged to check whether the cleaning agents used are compatible with the materials of the linear rotary motor.
- Cleaning must only be carried out when the axle is stationary. It is recommended that cleaning is carried out with the linear rotary shaft extended.
- The linear rotary shaft must be dried before it is put back into operation.
- The specified IP degree of protection is achieved at standstill.

4 Installation Instructions

4.1 Operating Conditions

Maximum ambient temperature limits:
- -10 °C…80 °C (non-condensing!)

Internal temperature sensor error occurs at:
- 90 °C

Max. Installation altitude
- The maximum installation altitude is 4000 m above sea level.
  From 1000 m onwards, a derating of 0.5% per 100 m must be taken into account for the nominal force or nominal torque in the case of air cooling.

4.2 Installation Options

The PR01 linear rotary motors have a centric fit (see drawing in chapter « Dimensions ») on the front side, so that an exact alignment of the rotation axis is possible.

Mounting only via the front screws is generally not sufficient (vibrations, transverse load) and must be supplemented by an additional support. For vibration reasons, a support as far back as possible is preferable. See the mounting examples in the following chapter. Please note that a tolerance compensation (see next chapter) must be provided so that the motor is not installed in the machine under tension. The detailed mounting dimensions can be found in chapter 10 "Dimensions". The corresponding CAD files are available in the LinMot eCatalog https://shop.linmot.com/

4.2.1 Vertical Installation

Option a)

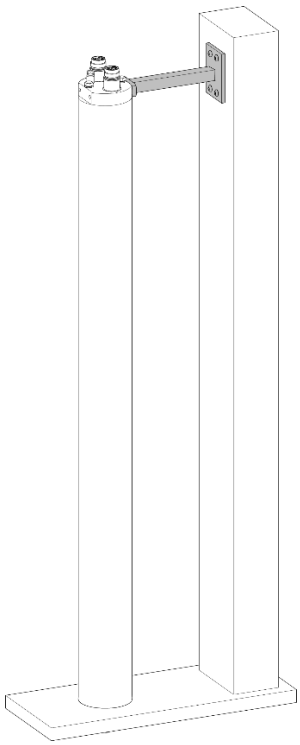

Option b)

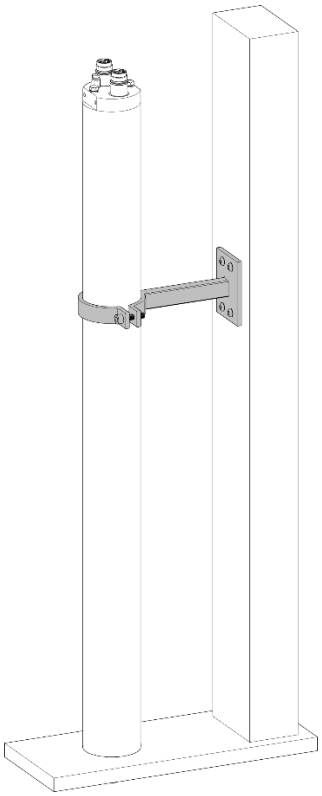

The motor can be screwed to the 4 threaded holes provided at the front.
There are 2 options for the rear mounting:

a) Fastening via threaded holes on the side at the end of the motor
b) Slight clamping via clamping ring on the cylindrical body

All technical details are shown in the "Dimensions" chapter.

In order to avoid overdetermination of the different motor bearings, the support must have a minimum clearance. This compensates for any tolerances in the linear rotary motor.

4.2.2 Horizontal installation

The motor can be screwed to the 4 threaded holes provided at the front.
There are 2 options for the rear mounting:

a) Fastening via threaded holes on the side at the end of the motor
b) Slight clamping via clamping ring on the cylindrical body

All technical details are shown in the "Dimensions" chapter.

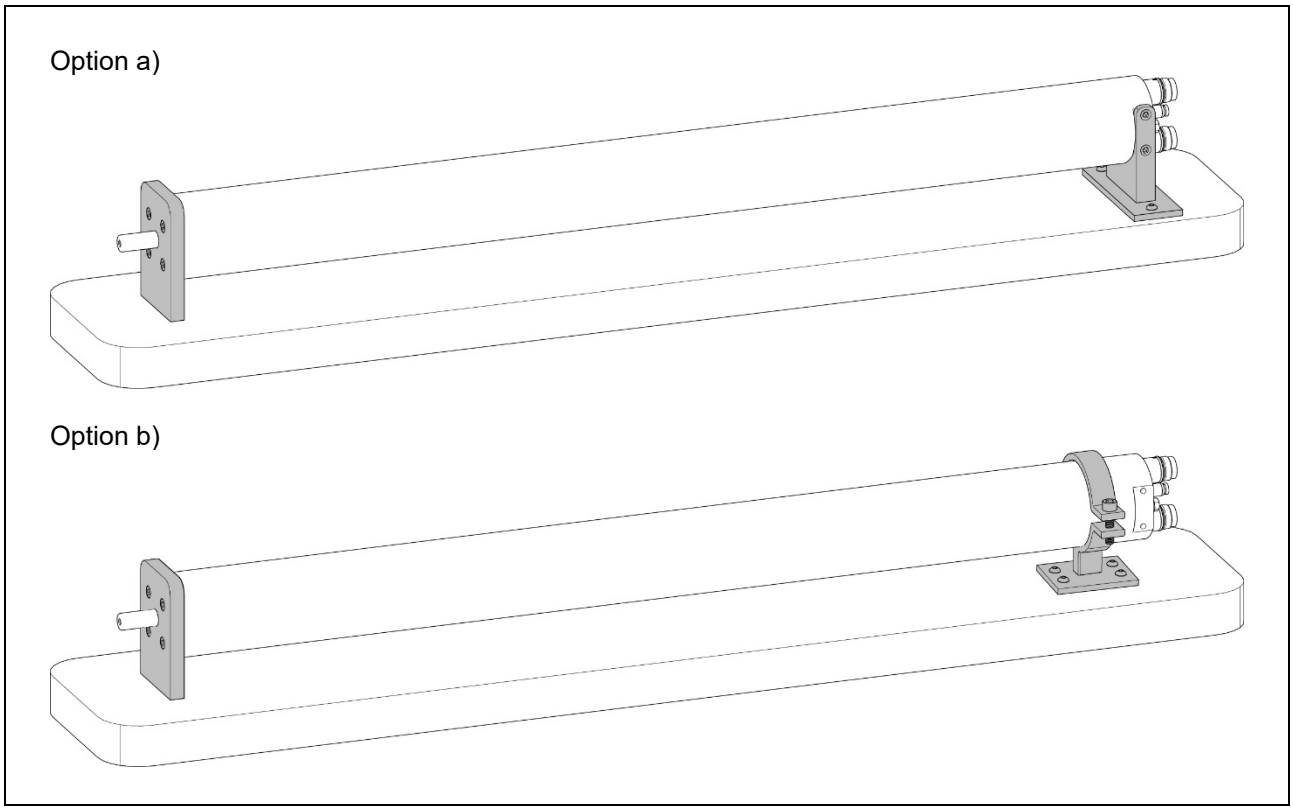

4.3 Mounting the Load on the Shaft

The assembly and disassembly of the load mass must not take place in the mechanical end stops of the linear movement. An external support must be used.

4.3.1 Feather Key

The load mass can be mounted via a feather key. For this purpose, a slot is machined into the end of the shaft.

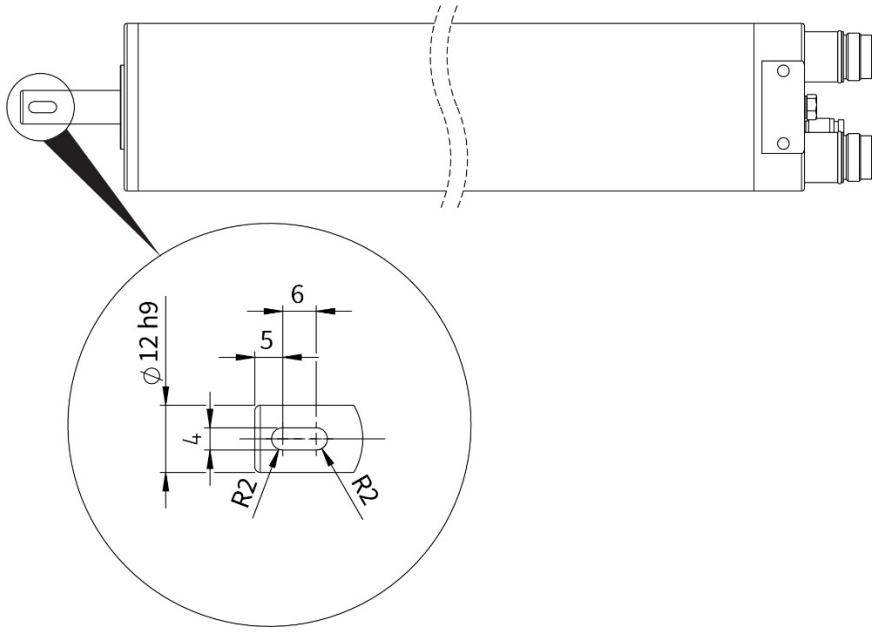

Specification of the Feather Key

Item	Description
Parallel keys deep pattern	face side domed / DIN 6885 A / ISO R773 4x4x10, steel C 45 K, plain

4.3.2 Shaft-Hub Clamping

The shaft-hub clamping is a non-positive connection which is produced by means of two conical rings.
The use of drivers or the production of grooves is completely eliminated. The suitable shaft-hub clamping type can be ordered from LinMot.
Mounting instructions and ordering information can be found in the "Accessories" chapter.

4.4 Material Data

Component	Material
Linear rotary shaft	Stainless Steel Mat. 1.4112 / 440B
Housing	Stainless Steel Mat. 1.4404 / 316 L
Plain bearing Linear Motor	HPV PPS Food Grade
Linear ball bearing (front)	Stainless Steel Mat. 1.4404 / 316 L
Wiper seal (front)	HPU premium
Rear seal/O-ring	Silicone (VMQ60 / 714166)

5 Connections

5.1 Motor Cable

Only connect or disconnect the motor connector and sensor cable if no voltage is applied to the servo drive! Only original LinMot cables may be used for wiring the motor and sensor! Even assembled cables may only be manufactured from the original LinMot components and must be checked carefully before commissioning!
Incorrect motor wiring can damage the motor and/or the servo drive!

5.1.1 Technical Data

	Wiring Linear Rotary Motor		
Cable type	Standard cable	High-flex cable	Robot cable
Cable name	K05-04/05	KS05-04/05	KR05-04/05
Min. bending radius stationary	25 mm (0.98 in)	30 mm (1.18 in)	40 mm (1.57 in)
Min. bending radius moving	Not suitable for applications with moving motor cable	60 mm No torsion	80 mm Max. torsion: ±270° pro 0.5 m
Approval	Cable material acc. UL	UL / CSA 300V	UL / CSA 300V
Material wire insulation	TPE-U	TPE-E	TPE-E
Material cable sheath	PUR	PUR	PUR
Oil resistance	very good	very good	very good
Chemical resistance (to acids, alkalis, solvents, hydraulic fluid)	good	good	good
Outdoor durability	very good	very good	very good
Flammability	flame retardant	flame retardant	flame retardant

5.2 Connector Wiring Linear Motor

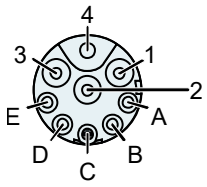

View: Motor connector, plug side

Connector wiring	Linear Motor: R-Connector	Wire colour Motor cable
Ph 1+	1	red
Ph 1-	2	pink
Ph 2+	3	blue
Ph 2-	4 (not connected)	grey
+5VDC	A	white
GND	B	inner shield
Sin	C	yellow
Cos	D	green
Temp.	E	black
Shield	Housing	outer shield

5.3 Connector Wiring Rotary Motor

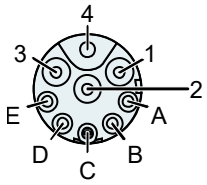

View: Motor connector, plug side

Connector wiring	Rotary Motor: R-Connector	Wire colour Motor cable
Ph A	1	red
Ph B	2	pink
Ph C	3	blue
(-)	4 (not connected)	grey
+5VDC	A	white
GND	B	inner shield
Sin	C	yellow
Cos	D	green
Temp.	E	black
Shield	Housing	outer shield

Motor extension cables are double shielded. The two shields of the extension cable are insulated from each other. The inner shield of the extension cable may only be connected to GND (no contact to the outer shield).
The outer shield must be connected to the shield of the connector.

5.4 Connecting the Drive to the Motor

The following diagram shows the connection of the linear motor with the LinMot Drive.

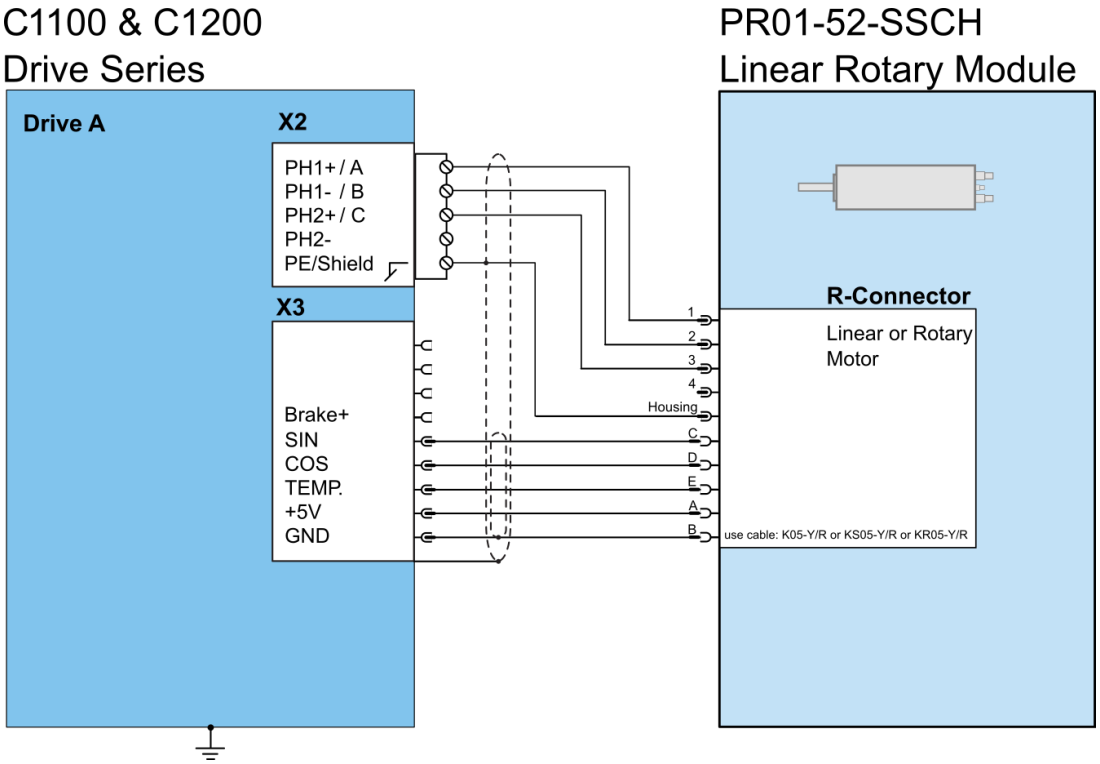

5.5 Pneumatic Air Connection

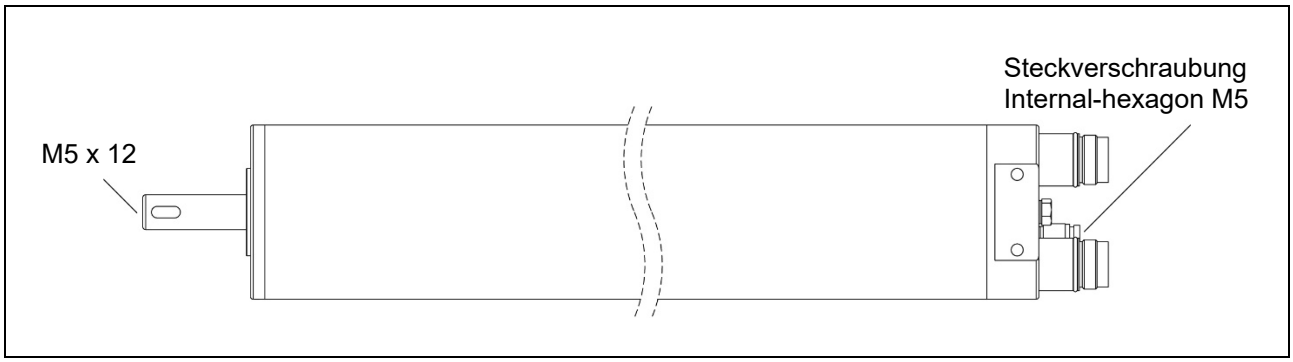

The PR01-52-SSCH Motors are optionally (Designation with « L » suffix) equipped with an air connection. At the rear of the motor, above the electrical connectors, there is a pneumatic push-in fitting (internal hexagon M5) for a Ø 4 mm hose. Inside the motor, a Ø 4 mm air hose is laid along the rotating shaft, which has a continuous hole diameter of Ø 2.5 mm. This enables the user to implement pneumatic applications with an operating pressure of max. 6 bar. In the case of vacuum application, it is recommended to use a unit with sufficient power, as experience has shown that all air coupling points generate small losses.
The specifications of the connections are shown in the drawing above.

6 Start-up

6.1 Linear Motor and Rotary Motor

Linear motor and rotary motor are electrically independent units. The commissioning of the linear motor can therefore be performed sequentially. It does not matter which motor (linear motor or rotary motor) is commissioned first.
The various parameters for the linear motor and the rotary motor are set on the drive side via the Motor Wizard in the LinMot Talk configuration program.

Do not drive into the internal mechanical stops!
It must be ensured that the linear motor does not move to the internal stop during operation under any circumstances, as otherwise the linear motor may be damaged! The internal stops may be used for the purpose of homing, but the homing speed must not exceed 0.01 m/s.

6.2 Default Values of the Coordinate System

6.2.1 Angle of Rotation

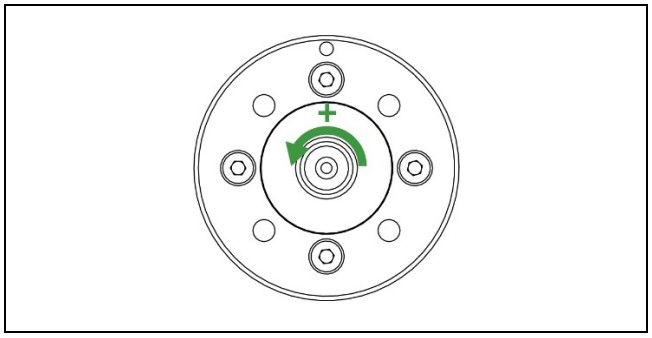

Looking into the shaft, the positive counterclockwise counting direction of the angle of rotation is defined.

6.2.2 Position

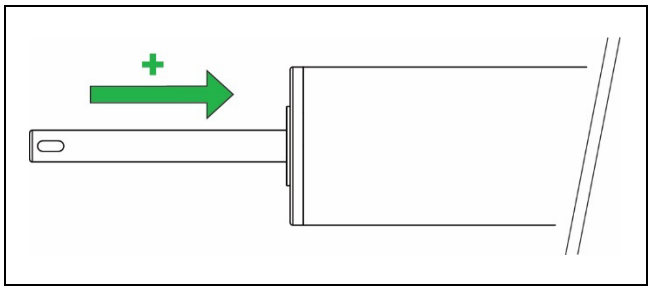

With regard to the motor, the positive counting direction of the position is defined by retracting the stroke rotary shaft.

To invert the coordinate system you will find detailed information in chapter 6.4.3.

6.3 Plug and Play Function for Linear Rotary Motors

LinMot linear rotary motors of the latest generation are Plug and Play capable (see motor label "PnP"). This means that they register with the drive independently. The module- and motor-specific parameters are automatically stored in the drive and the motor is ready for operation.

Application-specific parameters, such as cable length, load mass, PID control settings etc. can be entered by the user using the Motor Wizard.

To do this, click on the Motor Wizard symbol in the task bar of the LinMot-Talk software.
Then follow the sequence of steps from chapter 6.4.2.

6.4 Setting Motor Parameters

The various parameters for the linear motor and the rotary motor are set via the corresponding motor wizard in the LinMot Talk configuration program. To open the wizard, select the "Motor Wizard" icon in the task bar.

6.4.1 Selection of the Motor Data Files

If the connected motor is a module with plug and play functionality, the following step can be skipped.

If no "PnP" symbol is printed on the motor nameplate, the module and motor-specific parameters must be loaded manually via the Motor Wizard. So-called motor data files are available for this purpose. The motor data file corresponding to the module (*.adf or *.adp) must be selected in the first step of the Motor Wizard. The linear rotary motors are located in the installation directory of the LinMot-Talk software (download at www.linmot.com) in the folder "Motors\LinMot Linear Rotary Motors\...".

Please contact support if the motor data files are not available.

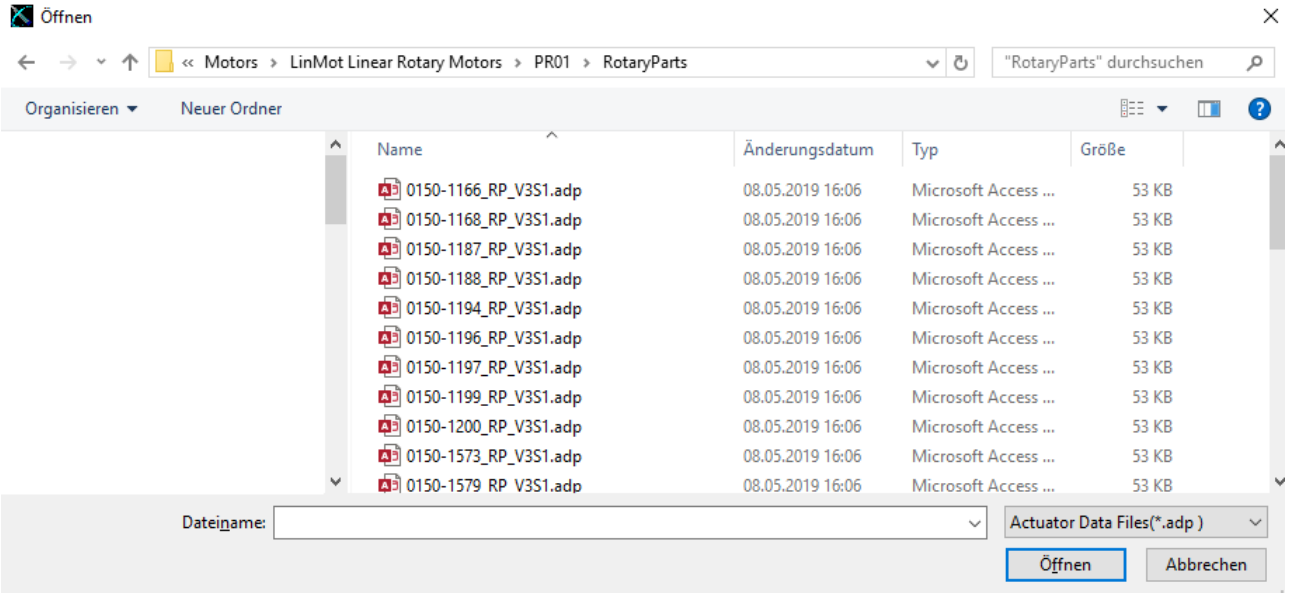

6.4.2 Application-specific Parameters

Application-specific parameters, such as cable length, load mass, PID control settings, etc. can be entered by the user using the Motor Wizard. The Motor Wizard must be started for this purpose. Once the Motor Datafile has been selected (according to the previous chapter), the Motor Wizard guides you through the menu step by step.
Application parameters should be entered as accurately as possible to ensure the best possible motor control.

6.4.3 Inverting the Coordinate System

Starting with LinMot-Talk version 6.8 the direction of the coordinate system can be selected.
Default value for rotary motors: Positive counting direction = counterclockwise (see figure chapter 6.2.1)
Default value for linear motors: Positive direction of movement = Regular (see figure in chapter 6.2.2)

> If the coordinate system is reversed, this has an influence on the current and the force/torque of the motor. In case of any uncertainties, the LinMot support should definitely be contacted.

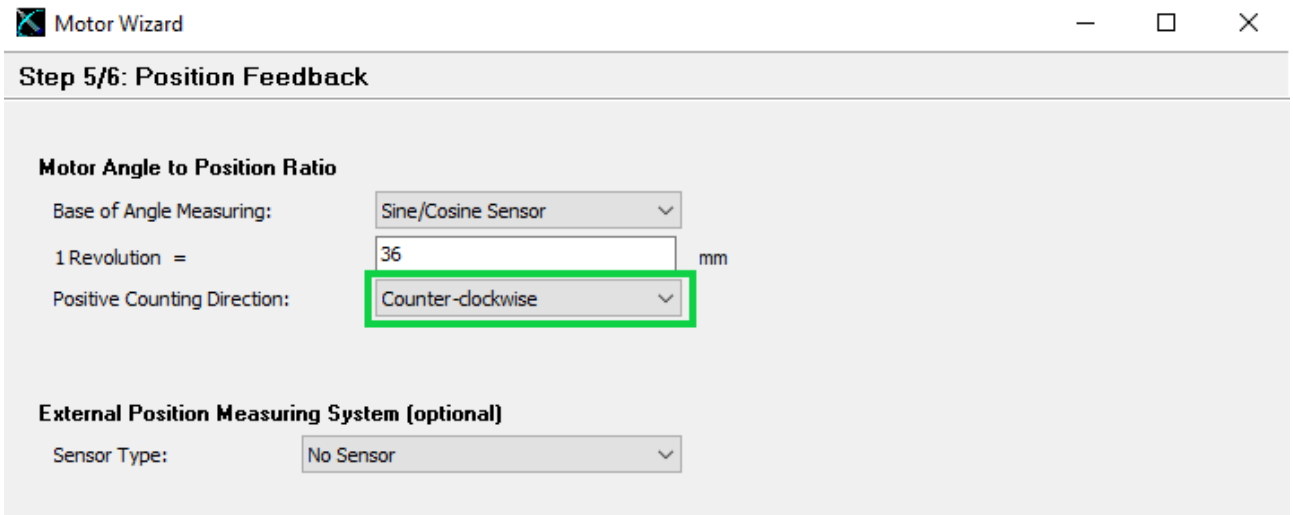

Figure: Selection of the positive counting direction (rotary motor)

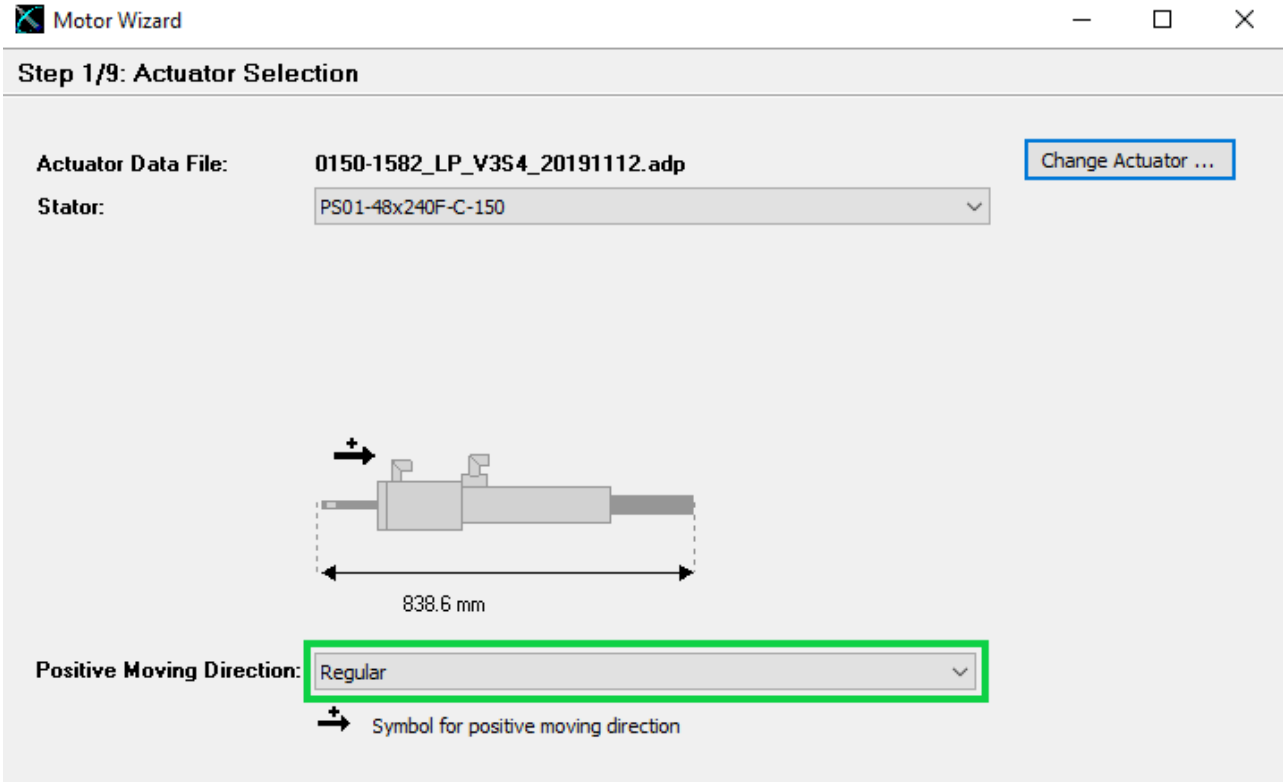

Figure: Selection of the positive direction of movement (linear motor)

6.4.4 Selection of the Linear and Rotary Unit System

In step 4 of the Motor Wizard the GUI (Graphical User Interface) of the LinMot-Talk software can be set. This setting only affects the display of the LinMot-Talk software. The resolution and scaling of the transmission data (raw data) to the higher-level PLC are retained.

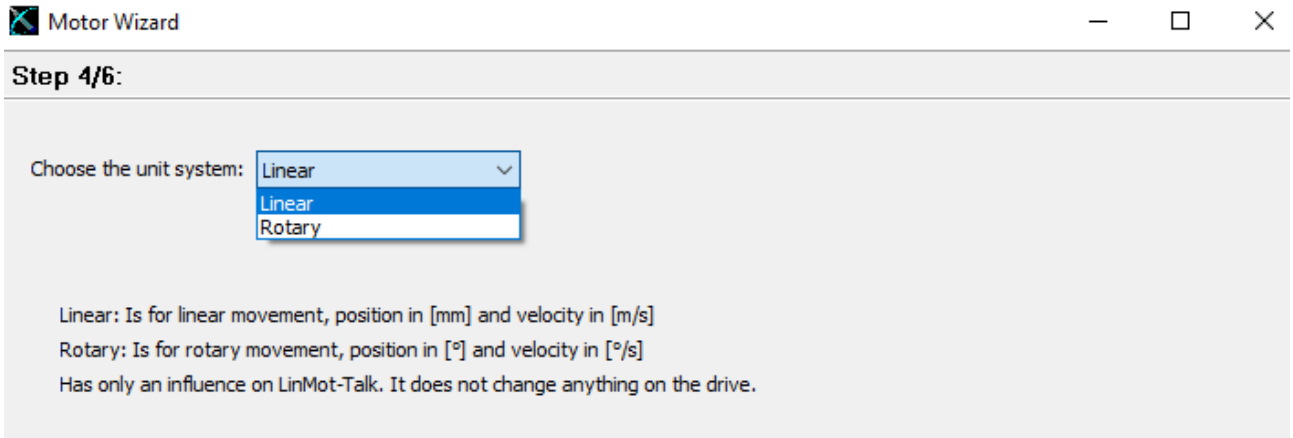

Figure: Selection of the units to be displayed in the LinMot-Talk software

6.4.5 Referencing the Linear Motor

The built-in linear motor has a position detection system which must be referenced. Various modes are available to the user for this purpose. Depending on the selected mode, the linear motor searches for a mechanical stop and/or an electronic switch, for example.

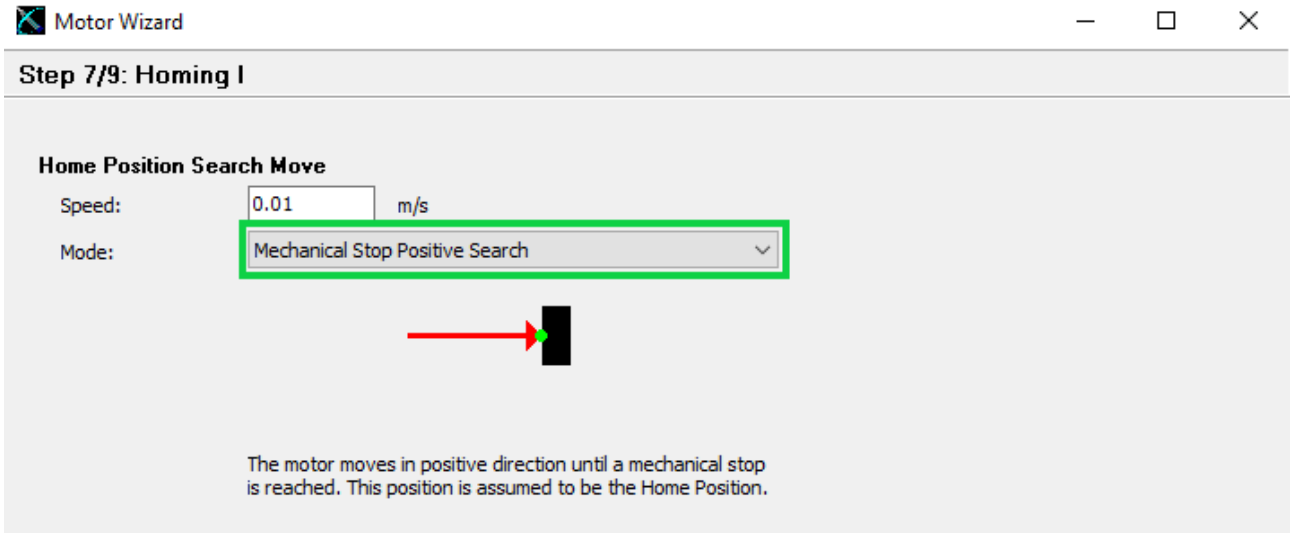

Figure: Selection of reference run linear motor

6.4.6 Referencing the Rotary Motor

The rotary motor has an integrated single-turn absolute encoder. This means that the rotary motor knows its position without any reference run after the drive is started up.

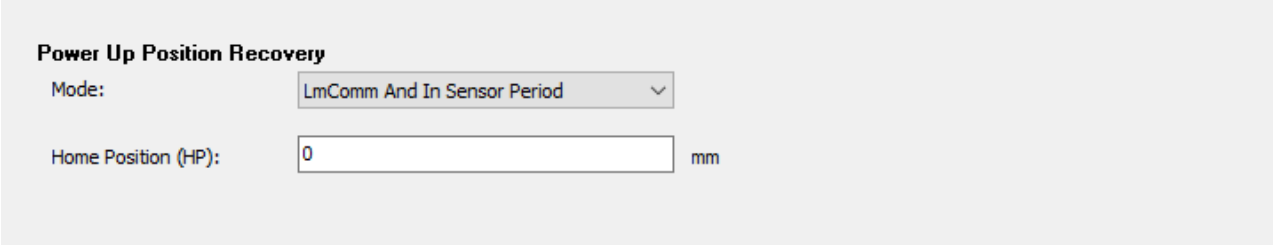

Figure: Activate the absolute encoder for rotary motors by selecting "LmComm And In Sensor Period" (default value). With parameter "Home Position" an offset to the start position can be set.

If a reference run is necessary due to mechanical events, e.g. an external gear, it is recommended to reference an external sensor. A number of options for homing are available to the user under Parameter -> Motion Control SW -> State Machine Setup -> Homing.

6.5 Magnetic Spring MagSpring®

Linear rotary motors from the LinMot PR01-52-SSCH motor family can be equipped with a MagSpring.

6.5.1 Force Direction

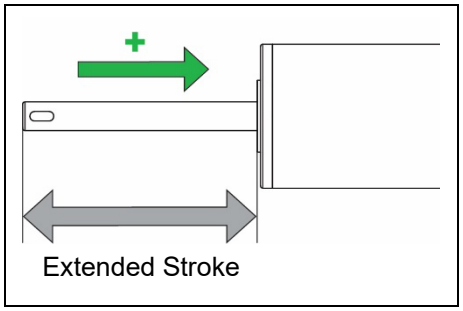

The built-in MagSpring is currently available in 1 direction of action. With the positive-acting MagSpring, the linear rotary shaft is pulled in.

The order suffix is given in the following table.

	Positive force direction
MagSpring 25 N	MS14
MagSpring 60 N	MS04

7 Accessories

7.1 Motor Cable

The connectors of the cable variants listed below differ in their degree of protection.
Cables with R connectors fulfil protection class IP 67, while cables with R-SSC connectors fulfil protection class IP 69k.

7.1.1 Linear Motor / Rotary Motor

Item	Description	Item-No.
K05-Y/R-2	Motor cable Y/R, 2 m	0150-2421
K05-Y/R-4	Motor cable Y/R, 4 m	0150-2422
K05-Y/R-6	Motor cable Y/R, 6 m	0150-2423
K05-Y/R-8	Motor cable Y/R, 8 m	0150-2424
K05-Y-Fe/R-	Motor cable K05-Y-Fe/R, Custom length	0150-3501
K05-Y-Fe/R-SSC-	Motor Cable Y-Fe/R-SSC, Custom length	0150-3715

Item	Description	Item-No.
KS05-Y/R-4	Trailing chain cable Y/R, 4 m	0150-2433
KS05-Y/R-6	Trailing chain cable Y/R, 6 m	0150-2434
KS05-Y/R-8	Trailing chain cable Y/R, 8 m	0150-2435
KS05-Y-Fe/R-	Trailing chain cable KS05-Y-Fe/R, Custom length	0150-3507
KS05-Y/R-SSC-4	Trailing Chain Cable Y/R-SSC, 4 m	0150-2688
KS05-Y/R-SSC-6	Trailing Chain Cable Y/R-SSC, 6 m	0150-2689
KS05-Y/R-SSC-8	Trailing Chain Cable Y/R-SSC, 8 m	0150-2690
KS05-Y-Fe/R-SSC-	Trailing Chain Cable Y-Fe/R-SSC, Custom length	0150-3646

Item	Description	Item-No.
KR05-Y-Fe/R-	Roboter cable KR05-Y-Fe/R, Custom length	0150-3512
KR05-Y-Fe/R-SSC-	Robot Cable KR05-Y-Fe/R-SSC-, Custom length	0150-4364

7.2 Shaft-Hub Clamping

Since linear rotary motors perform both rotary and linear motion, a load mounting method on the shaft must be selected that can absorb both torques and forces in the longitudinal direction. A frictional connection is created with the aid of a shaft-hub clamping.

Ordering information

Item	Description	Item-No.
RS01-SS12x22-SSC	Shaft-hub clamping stainless steel for 12mm shaft	0230-0485

7.2.1 Dimensions and Technical Data

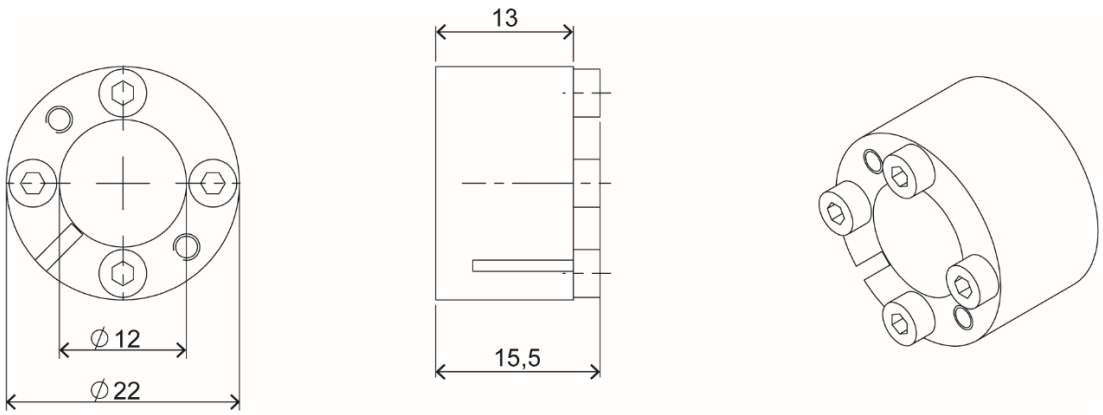

Item	For shaft	T [Nm]	F_{ax} [kN]	T_A [Nm]	D [mm]	Weight [g]
RS01-SS12x22-SSC	12 mm	7	1.2	0.5	22H9	22

T = transmittable torque at Fax = 0.
F_{ax} = transmittable axial force at T = 0.
T_A = fastening torque of the screws.
D = external exposure tolerance.

7.2.2 Mounting

- The shaft-hub clamping has to sit inside the bore by at least the clamp length (21 mm).
- Slightly oil the shaft-hub clamping before mounting, do not use molybdenum disulphide or fat.
- Tighten screws opposite each other 180 degrees offset in several steps to tightening torque T_A (see above for details).

8 Maintenance and Test Instructions

8.1 Maintenance

The linear rotary motors are provided with initial lubrication at the factory. Maintenance / cleaning is only necessary if the motors are heavily soiled.
Under normal industrial, Central European conditions (5-day week with 8 hours of operation per day), one inspection at the recommended interval is sufficient.
The inspection cycle must be shortened if there are heavy motor loads or deviating conditions. These conditions are e.g.:

- Permanent fouling
- Direct sunshine
- Low Humidity
- Outdoor operation
- Increased operating temperature
- Other special environmental conditions

Maintenance or disassembly of the linear rotary motors may only be carried out by trained companies:

- LinMot
- Companies qualified by LinMot

If the linear rotary motor is not opened by one of the above-mentioned companies, the warranty claim will be invalidated.

Ordering Information

Item	Description	Item-No.
MP01_MT01_PR01-52_EX00_AS00	Maintenance PR01-52: Replacement of all wearing parts, cleaning & lubrication	0120-4000

8.1.1 Preventive Inspection every 6'000h

To ensure the smoothest possible operation, a preventive inspection is recommended every 6,000 hours of operation or after one year under normal industrial, central european conditions.

When inspecting the motors, the following points must be checked:

c) Visual inspection of all wearing parts such as seals and wipers
d) Does the motor operating temperature or the motor current consumption correspond to the expected empirical values?
e) Are any suspicious or unknown noises or vibrations recognisable during operation?
f) Is smooth rotary and linear movement (attention with MagSpring) possible when de-energised?
g) Is there a light film of grease on the extended linear rotary shaft?

If one of the above points no longer applies, maintenance by LinMot or by a company qualified by LinMot is recommended (see chapter 8.1.2).

8.1.2 Needs-based maintenance

During needs-based maintenance, the linear rotary motor is completely disassembled, cleaned and relubricated. Among other things, the steps listed below are carried out:

- Replacement of seals and wipers
- Cleaning / lubrication of mechanically moving parts
- Replacement of the linear rotary shaft
- Replacement of all ball bushings / plain bearings / couplings / carriers
- Replacement of all air connections and seals
- Revision of the linear motor slider
- Final test & functional test of linear rotary motor
- Leak test for vacuum & compressed air with existing "air feed-through" option
- Replacement of the pneumatic cylinder if the "pneumatic pusher" option is available

8.1.3 Lubrication Specification

The following lubricants are used in the linear rotary motor:

Item	Description
LGFP2	SKF Aluminium Lubricant
LU02*	Lubricant for linear motors

** LinMot LU02 Lubricant corresponds to KLÜBERSYNTH UH1 14-31 which was developed for the food processing industry.*

Both lubricants are food grade and NSF H1 approved. Safety data sheets are available on request at support@linmot.com.

8.2 Electrical Resistance Test

To check the stators, the ohmic resistances between the individual connector pins can be measured. If the measured values are outside the tolerance of +/- 10% of the listed values, the stator could be damaged (listed values measured at 20°C).

8.2.1 Linear Motor PS01-37x120F-HP-R

Pin assignment	Pins	Resistance @ 20 °C
Phase 1+ / Phase 1-	Pin 1 / Pin 2	2.6 Ω
Phase 2+ / Phase 2-	Pin 3 / Pin 4	2.6 Ω
5V / GND	Pin A / Pin B	155 Ω
Sensor Sine / GND	Pin C / Pin B	33 kΩ
Sensor Cosine / GND	Pin D / Pin B	33 kΩ
Temp. Sensor / GND	Pin E / Pin B	10 kΩ
Phase / GND	Pin 1,2,3,4 / Pin B	>20 MΩ
All Pins / Shield	Pin 1-E / Housing	>20 MΩ

8.2.2 Rotary Motor Stator RS01-52x60-R

Pin assignment	Pins	Resistance @ 20 °C
Phase A / Phase B	Pin 1 / Pin 2	3 Ω
Phase A / Phase C	Pin 1 / Pin 3	3 Ω
5V / GND	Pin A / Pin B	155 Ω
Sensor Sine / GND	Pin C / Pin B	33 kΩ
Sensor Cosine / GND	Pin D / Pin B	33 kΩ
Temp. Sensor / GND	Pin E / Pin B	10 kΩ
Phase / GND	Pin 1,2,3,4 / Pin B	>20 MΩ
All Pins / Shield	Housing	>20 MΩ

9 Transport and Storage

- LinMot linear rotary motors may only be transported and stored in their original packaging.
- The motors should not be removed from the packaging until installation.
- The storage room must be dry, dust-free, frost-free and vibration-free.
- The relative air humidity should be less than 60 %.
- Prescribed storage temperature: -15 °C...70 °C
- Linear rotary motors must be protected against extreme weather conditions.

10 Dimensions

10.1 PR01-52x60-R/37x120F-HP-R-110-(L)_MS(xx)_SSCH

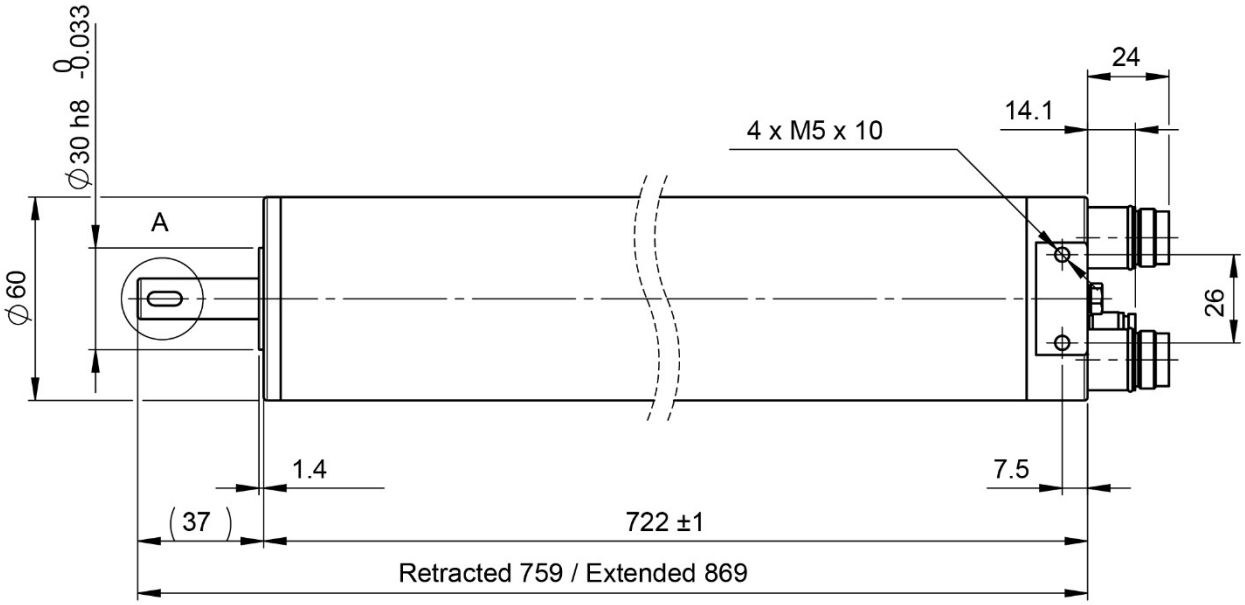

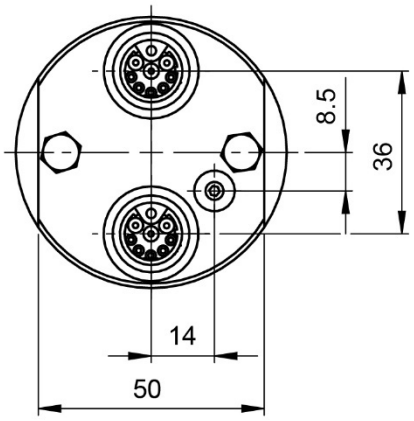

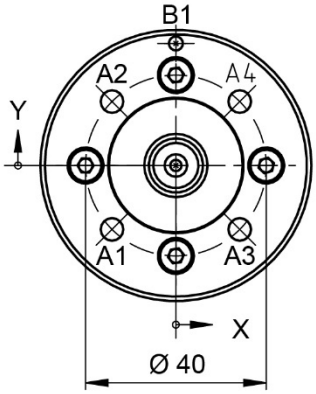

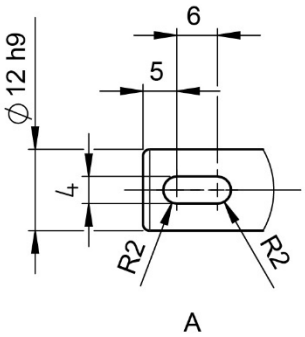

	X-Pos.	Y-Pos.	
A1	-14.14	-14.14	M6 ↧ 10
A2	-14.14	14.14	
A3	14.14	-14.14	
A4	14.14	14.14	
B1	0	27	Ø 3.21 H8 $^{+0.018}_{0}$ ↧ 5

in mm

11 International Certificates International Certificates

Europe	See chapter 11.1 “EU Declaration of Conformity CE-Marking”
UK	See chapter 11.2 “UK Declaration of Conformity UKCA-Marking”
IECEE CB SCHEME	Ref. Certif. Nr. CH-8521 See chapter 11.3 “CB Test Certificate”
USA / Canada	File Number E354430 See chapter 11.4 “UL Certificate”

11.1 EU Declaration of Conformity CE-Marking

NTI AG / LinMot ®
Bodenaeckerstrasse 2
8957 Spreitenbach

Switzerland

Tel.: +41 (0)56 419 91 91
Fax: +41 (0)56 419 91 92

declares under sole responsibility the compliance of the products:

- Linear Rotary Motors of the Series **PR01-52-SSCH**

with the EMC Directive 2014/30/EU.

Applied harmonized standards:

- **EN 61000-6-2: 2005 (Immunity for industrial environments)**
- **EN 61000-6-4: 2007 + A1: 2011 (Emission for industrial environments)**

According to the EMC directive, the listed devices are not independently operable products.

Compliance of the directive requires the correct installation of the product, the observance of specific installation guides and product documentation. This was tested on specific system configurations.

The safety instructions of the manuals are to be considered.

The product must be mounted and used in strict accordance with the installation instructions contained within the installation guide, a copy of which may be obtained from NTI AG.

Company: NTI AG
Spreitenbach, 23.10.2026

Dr.-Ing. Ronald Rohner
CEO NTI AG

11.2 UK Declaration of Conformity UKCA-Marking

NTI AG / LinMot ®
Bodenaeckerstrasse 2
8957 Spreitenbach

Switzerland

Tel.: +41 (0)56 419 91 91
Fax: +41 (0)56 419 91 92

declares under sole responsibility the compliance of the products:

- Linear Rotary Motors of the Series **PR01-52-SSCH**

with the EMC Regulation S.I. 2016 No. 1091.

Applied designated standards:

- **EN 61000-6-2: 2005 (Immunity for industrial environments)**
- **EN 61000-6-4: 2007 + A1: 2011 (Emission for industrial environments)**

According to the EMC regulation, the listed devices are not independently operable products.

Compliance of the regulation requires the correct installation of the product, the observance of specific installation guides and product documentation. This was tested on specific system configurations.

The safety instructions of the manuals are to be considered.

The product must be mounted and used in strict accordance with the installation instructions contained within the installation guide, a copy of which may be obtained from NTI AG.

Company: NTI AG
Spreitenbach, 23.10.2026

Dr.-Ing. Ronald Rohner
CEO NTI AG

11.3 CB Test Certificate

IEC IECEE CB SCHEME

Ref. Certif. No.

CH-8521

IEC SYSTEM FOR MUTUAL RECOGNITION OF TEST CERTIFICATES FOR ELECTRICAL EQUIPMENT (IECEE) CB SCHEME

CB TEST CERTIFICATE

Product	Linear motor
Name and address of the applicant	NTI AG Bodenäckerstrasse 2 SWITZERLAND 8957 Spreitenbach
Name and address of the manufacturer	NTI AG Bodenäckerstrasse 2 SWITZERLAND 8957 Spreitenbach
Name and address of the factory	NTI AG Bodenäckerstrasse 2 SWITZERLAND 8957 Spreitenbach
Note: When more than one factory, please report on page 2	☐ Additional Information on page 2
Ratings and principal characteristics	supplied via servo drive, see TR 17-EL-0006.E02 for details
Trade mark (if any)	LinMot
Customers's Testing Facility (CTF) Stage used	---
Model / Type Ref.	PR series PS series P04 series P05 series
Additional information (if necessary may also be reported on page 2)	---
	☐ Additional Information on page 2
A sample of product was tested and found to be in conformity with IEC	IEC 61000-6-2:2016 IEC 61000-6-4:2006, IEC 61000-6-4:2006/AMD1:2010 IEC 61000-6-7:2014
National differences	EU Group Differences; EU Special National Conditions; EU A-Deviations
As shown in the Test Report Ref. No. which forms part of this Certificate	17-EL-0006.E01 + .E02 + .Z01

This CB Test Certificate is issued by the National Certification Body

Electrosuisse
Luppmenstrasse 1
8320 Fehraltorf
SWITZERLAND

Signed by: Martin Plüss
Date: 2017-03-13

electro suisse

page 1 of 1

11.4 UL Certificate

CERTIFICATE OF COMPLIANCE

Certificate Number	E354430
Report Reference	E354430-20200921
Issue Date	2020-SEPTEMBER-28
Issued to:	NTI AG Bodenaeckerstr 2 8957 SPREITENBACH SWITZERLAND
This certificate confirms that representative samples of	COMPONENT - INCOMPLETE ROTATING MACHINES AND ROTATING MACHINE PARTS Class A Insulated Linear Rotary Motor unit PR01. Have been investigated by UL in accordance with the component requirements in the Standard(s) indicated on this Certificate. UL Recognized components are incomplete in certain constructional features or restricted in performance capabilities and are intended for installation in complete equipment submitted for investigation to UL LLC.
Standard(s) for Safety:	UL 1004-1 Rotating electrical machines CSA C22.2 No. 100 Motors and Generators
Additional Information:	See the UL Online Certifications Directory at https://iq.ulprospector.com for additional information.

This *Certificate of Compliance* does not provide authorization to apply the UL Recognized Component Mark. Only the UL Follow-Up Services Procedure provides authorization to apply the UL Mark.

Only those products bearing the UL Recognized Component Mark should be considered as being UL Certified and covered under UL's Follow-Up Services.

Look for the UL Recognized Component Mark on the product.

Bruce Mahrenholz, Director North American Certification Program

UL LLC

Any information and documentation involving UL Mark services are provided on behalf of UL LLC (UL) or any authorized licensee of UL. For questions, please contact a local UL Customer Service Representative at http://ul.com/aboutul/locations/

Page 1 of 1

ALL LINEAR MOTION FROM A SINGLE SOURCE

Europe / Asia Headquarters

NTI AG - LinMot & MagSpring
Bodenaeckerstrasse 2
CH-8957 Spreitenbach
Switzerland

Sales / Administration: +41 56 419 91 91
office@linmot.com

Tech. Support: +41 56 544 71 00
support@linmot.com

Web: https://www.linmot.com/

North / South America Headquarters

LinMot USA Inc.
N1922 State Road 120, Unit 1
Lake Geneva, WI 53147
USA

Sales / Administration: 262.743.2555
usasales@linmot.com

Tech. Support: 262.743.2555
usasupport@linmot.com

Web: https://www.linmot-usa.com/

Visit https://linmot.com/contact/ to find a distributor near you.

© 2026 NTI AG / LinMot