LINEAR MODULES DM01

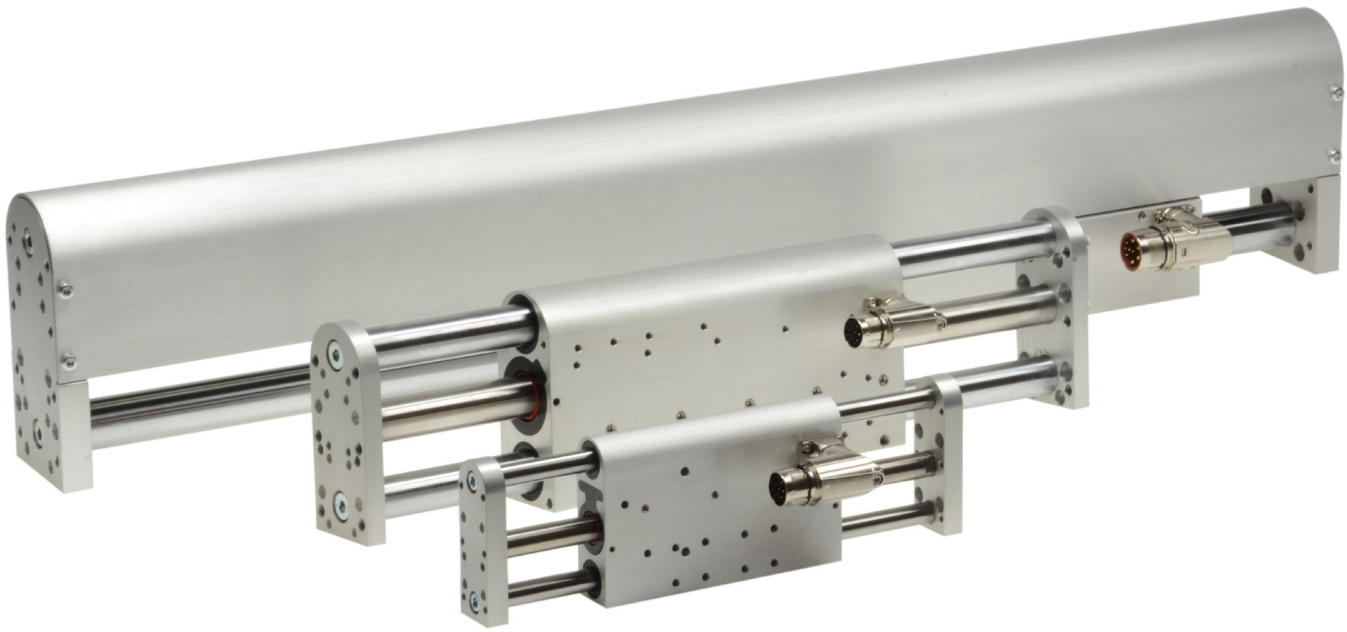

- 3 sizes in stroke range up to 575 mm and forces up to 572 N
- Direct mounting of the load with absorption of transverse forces
- Anodised aluminium housing for easy cleaning
- Corrosion-resistant, hard chrome-plated guide rods
- Linear ball bearings with food grade lubricant (NSF H1)
- Equipped with "Plug and Play" technology
- Simple load simulation by LinMot Designer Software
- MagSpring® option available for vertical load compensation
- Can be combined to form two-axis systems

LINEAR MODULES DM01

Description.....3

DM01-23x80.....6

DM01-23x160.....12

DM01-37x120.....18

DM01-48x150.....30

DM01-48x240.....38

DM01-48x360.....46

Accessories.....53

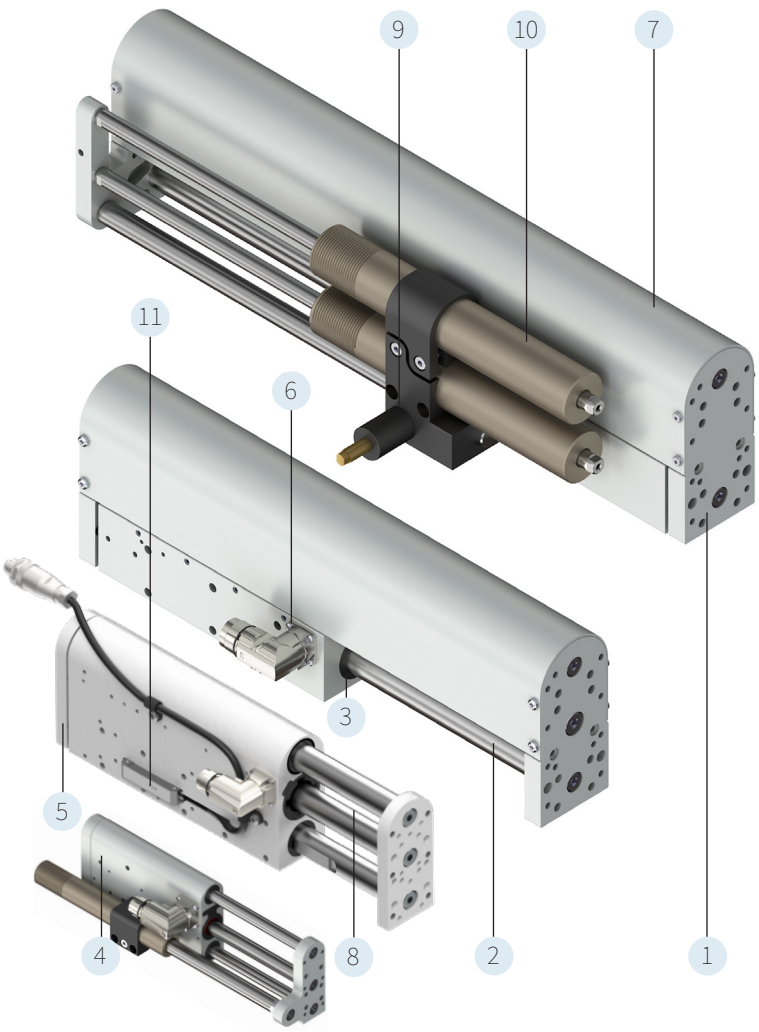

1. Front plate with counterbore holes for precise load mounting
2. Hardened, chrome-plated shafts with high corrosion resistance
3. Linear ball bearings with food grade lubricant (NSF H1)
4. Guide block with counterbores holes for un-complicated and precise mounting of the linear module
5. Front plate (back) with counterbore holes for precise load mounting
6. Linear motor stator with integrated temperature and position sensors and electronic type plate
7. Aluminium casing protects the slider from contact and increases stability. (Only for DM01-48)
8. Magnetic slider of the linear motor (Magnets are protected in a chrome steel tube)
9. Pneumatic holding brake with max. holding force 1000 N (Optional for DM01-48)
10. Magnetic spring MagSpring® for vertical load compensation (Optional)
11. Position sensor with high repeat accuracy and absolute resolution as well as function and status LED (Optional)

Linear Modules DM01

The DM01 linear modules are a complete drive solution consisting of a linear guide with a permanently integrated LinMot stator. These modules come optionally equipped with a constant-force magnetic spring called a "MagSpring" for counterbalancing vertical loads. Carefully engineered shafts guided by linear ball bearings ensure precise linear motion. The rounded surfaces of the housing facilitate maintenance and cleaning of the linear guides. Improvements in material and design allow the drive unit to achieve a higher bending stiffness while maintaining a light moving mass. The core technology of these drive units consist of PS01-23, PS01-37, and PS01-48 LinMot linear motors. These options allow the user to produce forces of up to 572 N and stroke lengths of up to 575 mm. The motor capabilities, with accelerations of up to 50 m/s2 and a maximum velocity of 5 m/s, will be able to successfully exceed the demands of virtually any application. Each DM01 linear guide is delivered to the customer pre-assembled, and only one article number is required for ordering. The simulation software «LinMot Designer», which is available online at any time, ensures the correct selection and design of the linear modules. The «Plug and Play» technology available within these guided motors makes drive commissioning quick and simple. The motor configuration parameters are automatically read into the servo drive.

DM01 Linear Modules with vertical Load Compensation «MagSpring®»

In vertical mounting position, linear modules and other direct drives must permanently apply a constant force to counteract the weight force. A magnetic spring, MagSpring®, installed parallel to the linear motor can be used to passively compensate for the weight force. The drive is only used for the actual positioning operation or for applying the dynamic forces and can be dimensioned accordingly smaller. Since MagSprings are purely passive elements, a defined function or position of a device can be ensured in the de-energized state. Examples are the lifting of a gripper or print head in vertical arrangements.

The mode of operation is based on the attractive force of permanent magnets. Accordingly, no energy source (electricity, compressed air, etc.) is needed. The special design of the flow-guiding components and the magnets translates the strongly non-linear relationship between force and displacement in magnet-iron arrangements into a constant force curve. Depending on the strength class of the MagSpring, the permanent magnets are either in the stator, in the slider, or in both components. The slider is guided by an integrated plain bearing, so that MagSprings can be used comparably to gas pressure springs in a design. The effective force is in the range of +/- 10% of the nominal force, due to material and manufacturing tolerances.

The DM01 linear modules are optionally available with permanently installed MagSpring (MSxx option). These include various strength classes from 10 N to 60 N constant force. In addition to the commonly used pulling arrangement of the load axis, it is also possible to realise a pushing arrangement. For this purpose, the module is simply rotated, resulting in a slight MagSpring overhang depending on the type.

Pulling Arrangement

Pushing Arrangement

DM01 Linear Modules with Pneumatic Holding Brake

As an option, the DM01-48 linear modules can be ordered with a holding brake. The order code is indicated with the abbreviation BK01. The brake is controlled via the LinMot servo drive or directly via the PLC. For opening and closing, an additional electrical solenoid valve is required. The brake acts on a brake shaft arranged parallel to the slider and is released using compressed air. The compressed air connection is made by a G 1/8" connecting thread. With an activated brake, the linear module achieves a holding force of up to 1000 N.

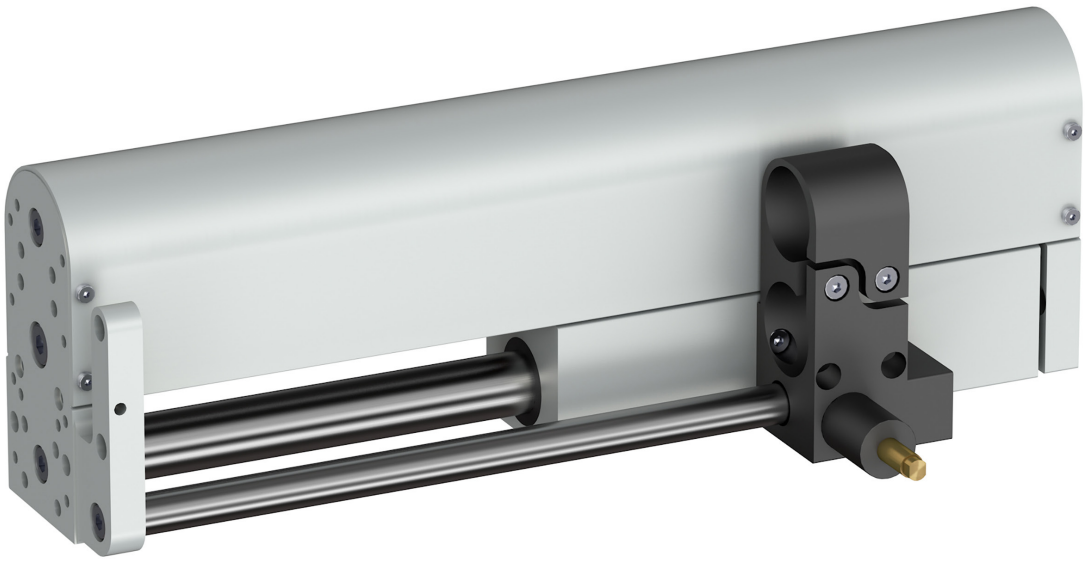

Designation Code Linear Modules DM01

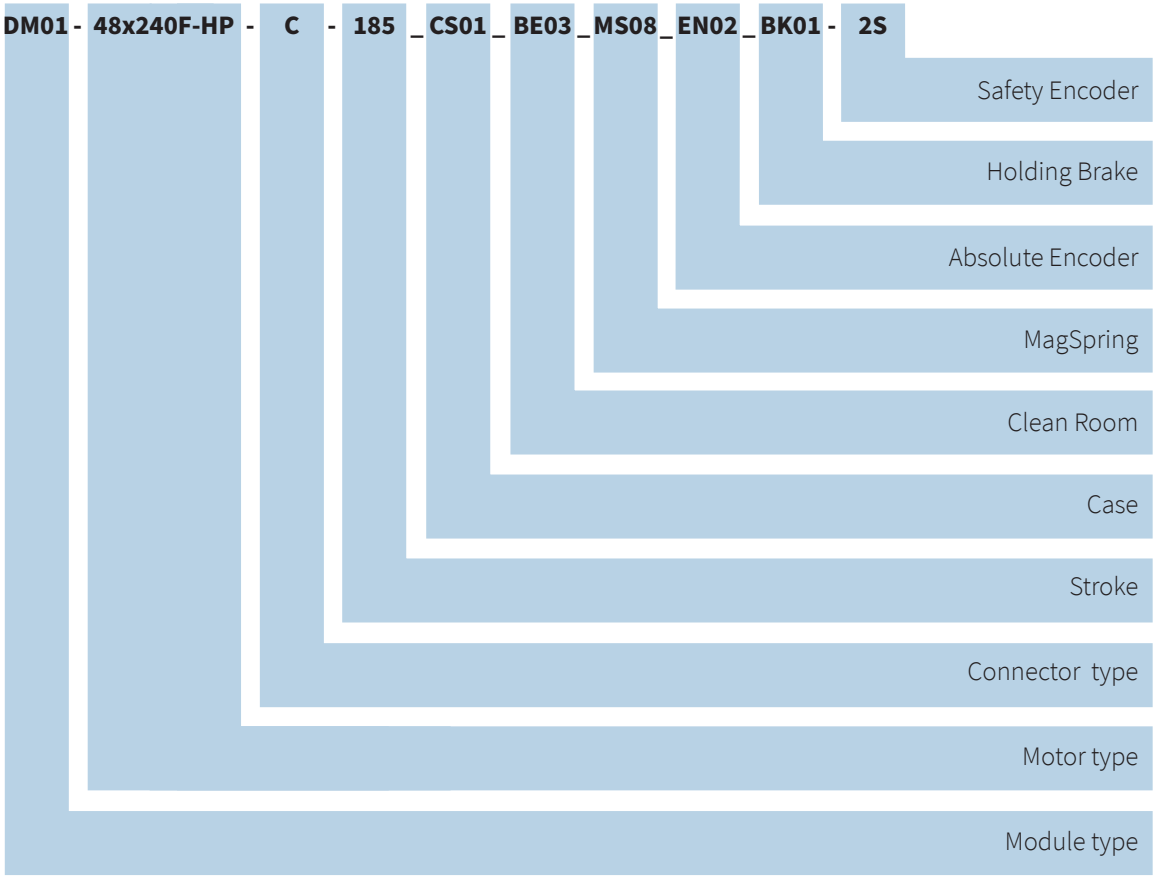

The DM01 linear module product family currently offers more than 200 product variants. Each variant has its own article number and is delivered pre-assembled. The large variety of sizes, strokes, forces and features opens up a very comprehensive range of applications for the user.

LINEAR MODULE DM01-23x80

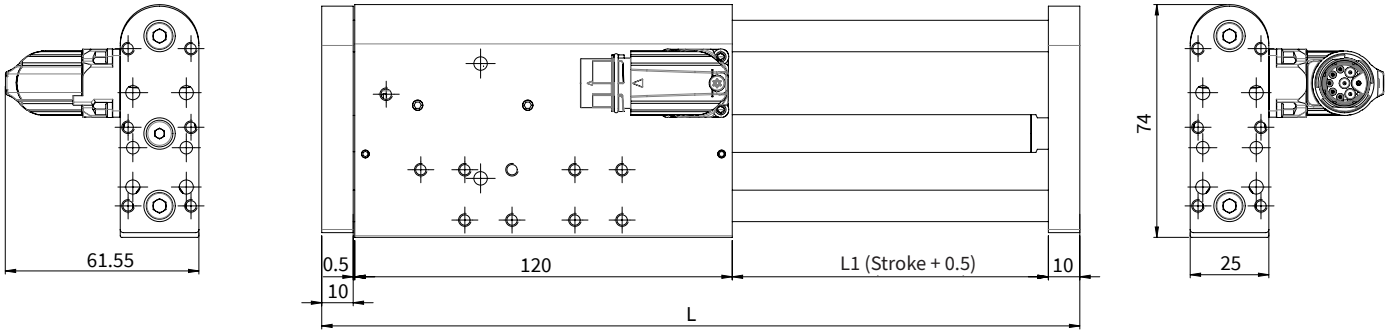

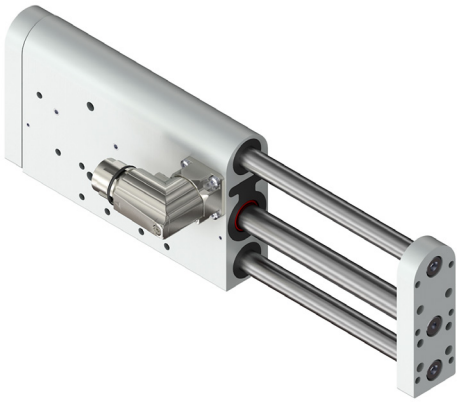

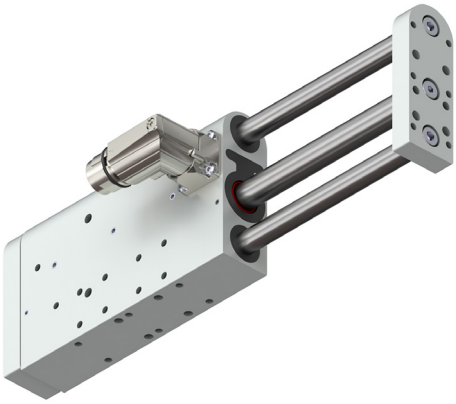

Dimensions in mm

Linear Module	Stroke H [mm (inch)]		Carriage length L [mm (inch)]		Moving mass [1] [g (lb)]		Total weight [g (lb)]	
DM01-23x80F-HP-R-60	60	(2.36)	201	(7.91)	460	(1.01)	1039	(2.29)
DM01-23x80F-HP-R-100	100	(3.93)	241	(9.49)	542	(1.19)	1121	(2.47)
DM01-23x80F-HP-R-160	160	(6.30)	301	(11.85)	666	(1.47)	1245	(2.74)
DM01-23x80F-HP-R-220	220	(8.66)	361	(14.21)	774	(1.71)	1353	(2.98)
DM01-23x80F-HP-R-290	290	(11.42)	431	(16.97)	915	(2.02)	1494	(3.29)
DM01-23x80F-HP-R-350	350	(13.78)	491	(19.33)	1037	(2.29)	1616	(3.56)

[1] Mass: Slider, Shafts, Front plate, Front plate back

MATERIALS

Guide Block & Front Plate	Guide Shaft	Bearing	Wipers
Anodized Aluminum	Hardened steel, hard chrome-plated, ø 10 mm	Linear ball bearing	H-ECOPUR

LINEAR MODULE DM01-23x80_MSxx WITH VERTICAL LOAD COMPENSATION MAGSPRING®

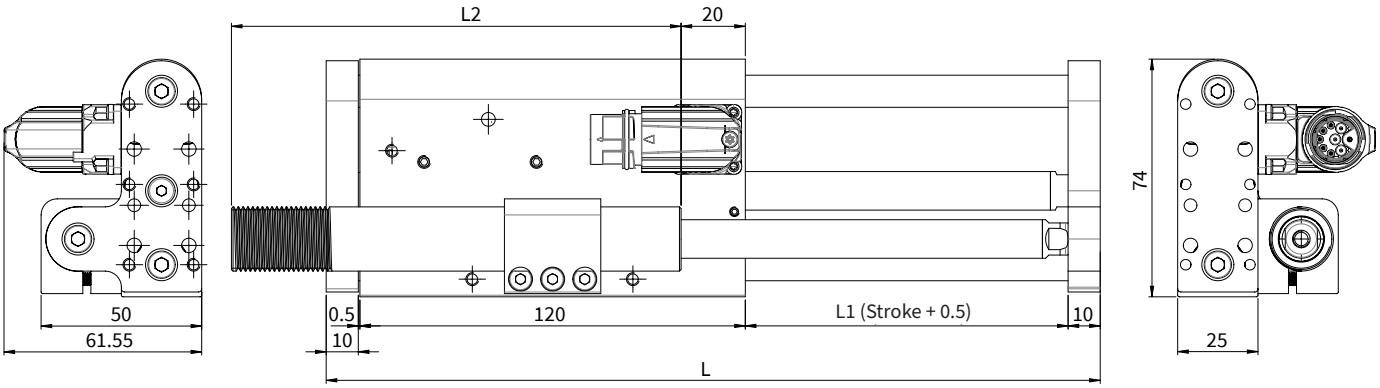

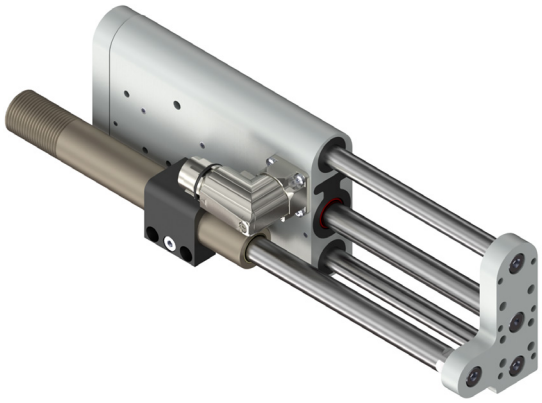

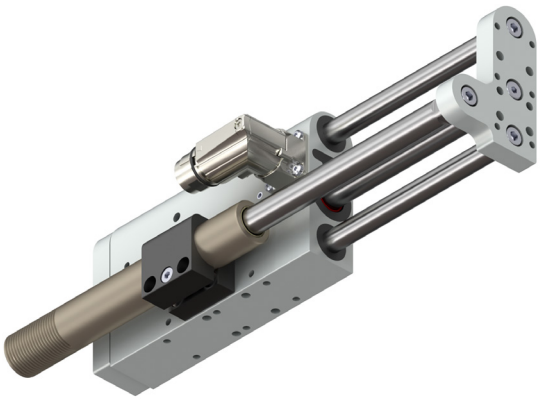

Dimensions in mm

Linear module with MagSpring	Stroke H [mm (inch)]		MS Stator length L2 [mm (inch)]		Carriage length L [mm (inch)]		Moving mass [1] [g (lb)]		Total weight [g (lb)]	
DM01-23x80F-HP-R-60_MSxx [2]	60	(2.36)	82	(3.23)	201	(7.91)	580	(1.28)	1293	(2.85)
DM01-23x80F-HP-R-100_MSxx [2]	100	(3.93)	140	(5.51)	241	(9.49)	728	(1.60)	1441	(3.18)
DM01-23x80F-HP-R-160_MSxx [2]	160	(6.30)	220	(8.66)	301	(11.85)	926	(2.04)	1639	(3.61)
DM01-23x80F-HP-R-220_MSxx [2]	220	(8.66)	300	(11.81)	361	(14.21)	1034	(2.28)	1747	(3.85)
DM01-23x80F-HP-R-290_MSxx [2]	290	(11.42)	300	(11.81)	431	(16.97)	1275	(2.81)	1988	(4.38)

[1] Masse: Mass: Slider, Shafts, Front plate, Front plate back, MagSpring slider
[2] MagSpring variants with different constant forces
MS11: Constant force 11N (Eff. load compensation depending on moving mass)
MS12: Constant force 17N (Eff. load compensation depending on moving mass)
MS13: Constant force 22N (Eff. load compensation depending on moving mass)

MATERIALS

Guide Block & Front Plate	Guide Shaft	Bearing	Wipers
Anodized Aluminum	Hardened steel, hard chrome-plated, ø 10 mm	Linear ball bearing	H-ECOPUR

PERFORMANCE DATA DM01-23x80

Performance Data Linear Module DM01-23x80				
Stroke				
Max. Stroke	mm	(in)	350	(13.78)
Force				
Max. Force @ 48VDC	N	(lbf)	67.1	(15.1)
Max. Force @ 72VDC	N	(lbf)	67.1	(15.1)
Max. Cont. Force [Passive cooling/ Fan / Fluid]	N	(lbf)	18.5 / 25 / -	(4.2 / 5.7 / -)
Force Constant	N/A_{pk}	(lbf/A_{pk})	8.95	(2.01)
Position Detection				
Position Resolution	mm	(in)	0.002	(0.0001)
Repeatability	mm	(in)	±0.05	(±0.002)
Position Resolution with ES	mm	(in)	-	(-)
Repeatability with ES	mm	(in)	-	(-)
Electrical Data				
Max. Current @ 48VDC	A_{pk}		7.4	
Max. Current @ 72VDC	A_{pk}		7.4	
Max. Cont. Current [Passive cooling /Fan / Fluid]	A_{pk}		2.0 / 2.8 / -	
Terminal Resistance 25 °C / 120 °C	Ohm		4.2 / 6.2	
Terminal Inductivity	mH		0.6	
Magnetic Period	mm	(in)	20	(0.78)
Thermal Data				
Max. Winding Temperature (Sensor)	°C		120	
Thermal Resistance [Passive cooling / Fan / Fluid]	K/W		3.17 / 1.69 / -	
Thermal Time Constant [Passive cooling / Fan / Fluid]	s		300 / 200 / -	
Mechanical Data				
Stator Diameter	mm	(in)	23	(0.91)
Slider Diameter	mm	(in)	12	(0.47)
IP Code			IP 64 S	
Certification				
cURus	File-No.		E354430	

13

CONNECTOR

Motor Connector Wiring	R-Connector	Wire Color Motor Cable
Ph 1+	1	red
Ph 1-	2	pink
Ph 2+	3	blue
Ph 2-	4	grey
+5VDC	A	white
GND	B	inner Shield
Sinus	C	yellow
Cosinus	D	green
Temp.	E	black
Shield	Case	outer Shield

R-Connector

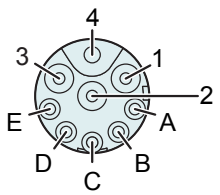

View: Motor connector, plug side
Material: nickel plated
IP Code: IP 67

MAXIMUM LOAD

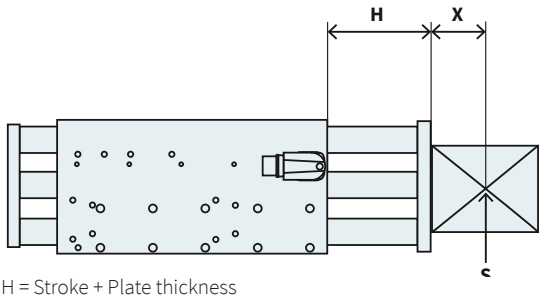

H = Stroke + Plate thickness
X = Distance to center of gravity
S = Center of gravity
Cantilever extension = H + X

The maximum load depends on the cantilever extension (distance H plus distance between the center of gravity of the working load and the mounting surface).

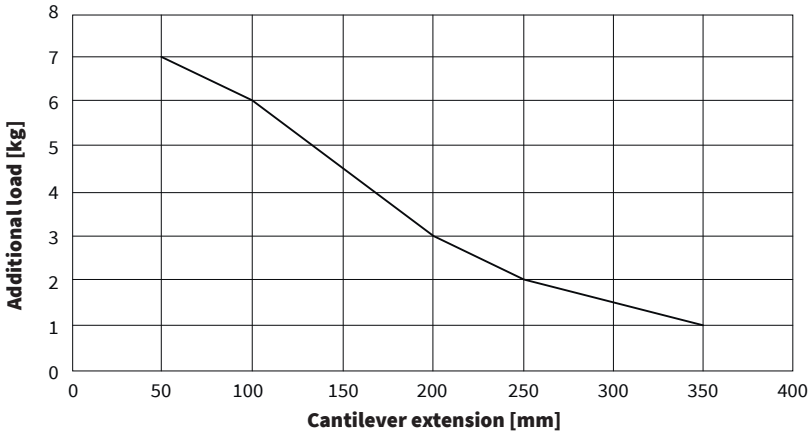

VERTICAL DEFLECTION

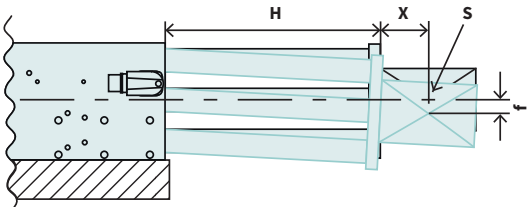

H = Stroke + Plate thickness
S = Center of gravity
X = Distance to center of gravity
f = Deflection of theoretical axis

Total deflection =
Static deflection + deflection under load
(Deflection measured at standstill)

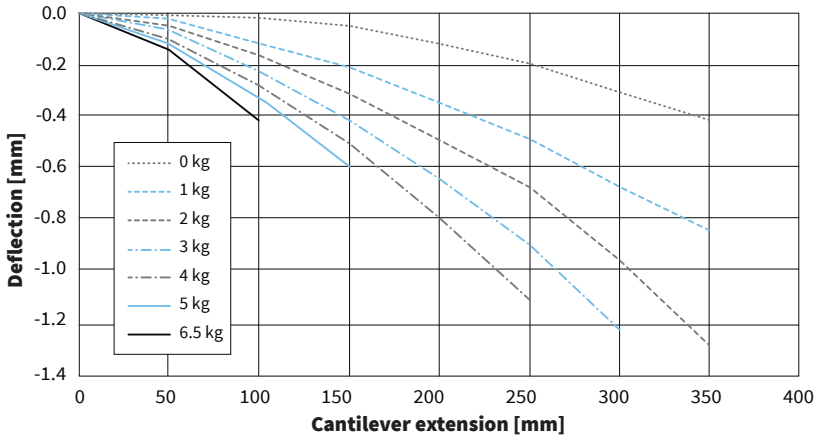

ORDERING INFORMATION

Item	Description	Item-No.
DM01-23x80F-HP-R-60	Linear Module, Stroke max 60mm	0150-4046
DM01-23x80F-HP-R-60_MS11	Linear Module with MagSpring 11N, Stroke max 60mm	0150-4060
DM01-23x80F-HP-R-60_MS12	Linear Module with MagSpring 17N, Stroke max 60mm	0150-4061
DM01-23x80F-HP-R-60_MS13	Linear Module with MagSpring 22N, Stroke max 60mm	0150-4062
DM01-23x80F-HP-R-100	Linear Module, Stroke max 100mm	0150-4047
DM01-23x80F-HP-R-100_MS11	Linear Module with MagSpring 11N, Stroke max 100mm	0150-4063
DM01-23x80F-HP-R-100_MS12	Linear Module with MagSpring 17N, Stroke max 100mm	0150-4064
DM01-23x80F-HP-R-100_MS13	Linear Module with MagSpring 22N, Stroke max 100mm	0150-4065
DM01-23x80F-HP-R-160	Linear Module, Stroke max 160mm	0150-4052
DM01-23x80F-HP-R-160_MS11	Linear Module with MagSpring 11N, Stroke max 160mm	0150-4066
DM01-23x80F-HP-R-160_MS12	Linear Module with MagSpring 17N, Stroke max 160mm	0150-4067
DM01-23x80F-HP-R-160_MS13	Linear Module with MagSpring 22N, Stroke max 160mm	0150-4068
DM01-23x80F-HP-R-220	Linear Module, Stroke max 220mm	0150-4053
DM01-23x80F-HP-R-220_MS11	Linear Module with MagSpring 11N, Stroke max 220mm	0150-4069
DM01-23x80F-HP-R-220_MS12	Linear Module with MagSpring 17N, Stroke max 220mm	0150-4070
DM01-23x80F-HP-R-220_MS13	Linear Module with MagSpring 22N, Stroke max 220mm	0150-4071
DM01-23x80F-HP-R-290	Linear Module, Stroke max 290mm	0150-4087
DM01-23x80F-HP-R-290_MS11	Linear Module with MagSpring 11N, Stroke max 290mm	0150-4088
DM01-23x80F-HP-R-290_MS12	Linear Module with MagSpring 17N, Stroke max 290mm	0150-4089
DM01-23x80F-HP-R-290_MS13	Linear Module with MagSpring 22N, Stroke max 290mm	0150-4091
DM01-23x80F-HP-R-350	Linear Module, Stroke max 350mm	0150-4092

Item	Description	Item-No.
DM01-23x80F-HP-R-60_BE03	Linear Module, Stroke max 60mm - Clean Room	0150-4624
DM01-23x80F-HP-R-100_BE03	Linear Module, Stroke max 100mm - Clean Room	0150-4426
DM01-23x80F-HP-R-160_BE03	Linear Module, Stroke max 160mm - Clean Room	0150-4427
DM01-23x80F-HP-R-220_BE03	Linear Module, Stroke max 220mm - Clean Room	0150-4625
DM01-23x80F-HP-R-290_BE03	Linear Module, Stroke max 290mm - Clean Room	0150-4428
DM01-23x80F-HP-R-350_BE03	Linear Module, Stroke max 350mm - Clean Room	0150-4626

LINEAR MODULE DM01-23x160

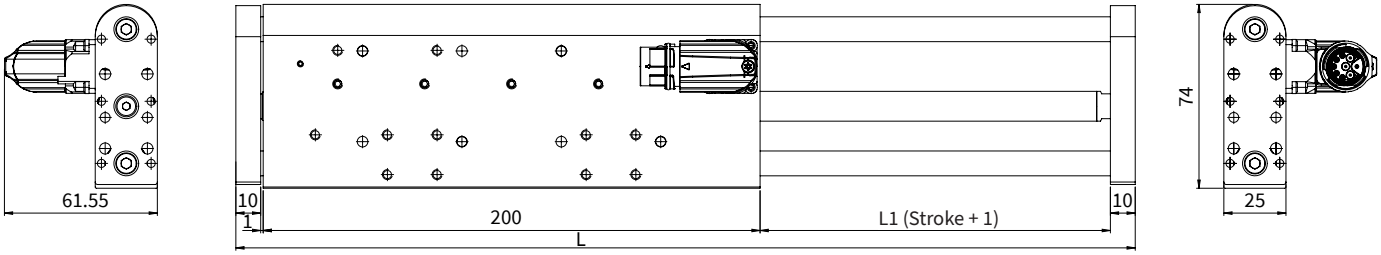

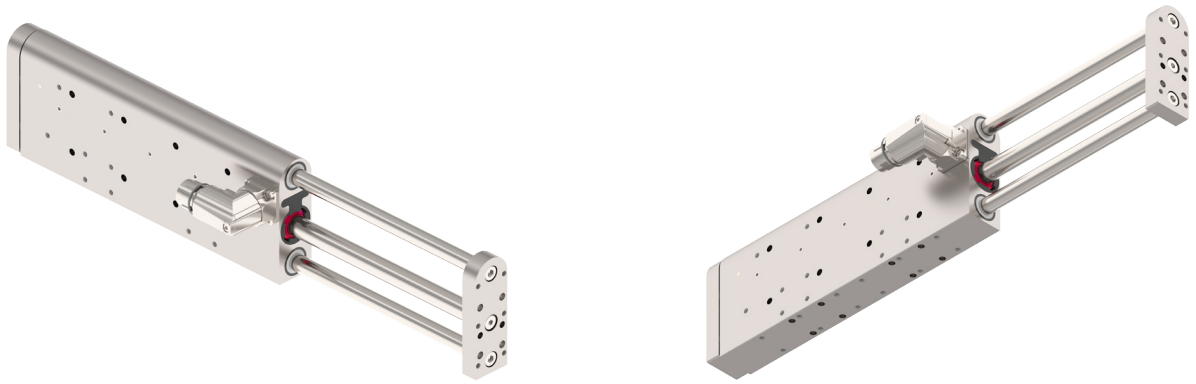

Dimensions in mm

Linear Module	Stroke H [mm (inch)]		Carriage length L [mm (inch)]		Moving mass [1] [g (lb)]		Total weight [g (lb)]	
DM01-23x160H-XP-R-80	80	(3.15)	302	(11.89)	670	(1.48)	1640	(3.62)
DM01-23x160H-XP-R-140	140	(5.51)	362	(14.25)	800	(1.76)	1770	(3.90)
DM01-23x160H-XP-R-210	210	(8.27)	432	(17.00)	940	(2.07)	1910	(4.21)
DM01-23x160H-XP-R-270	270	(10.63)	492	(19.37)	1060	(2.34)	2030	(4.48)

[1] Mass: Slider, Shafts, Front plate, Front plate back

13

MATERIALS

Guide Block & Front Plate	Guide Shaft	Bearing	Wipers
Anodized Aluminum	Hardened steel, hard chrome-plated, ø 10 mm	Linear ball bearing	H-ECOPUR

LINEAR MODULE DM01-23x160_MSxx WITH VERTICAL LOAD COMPENSATION MAGSPRING®

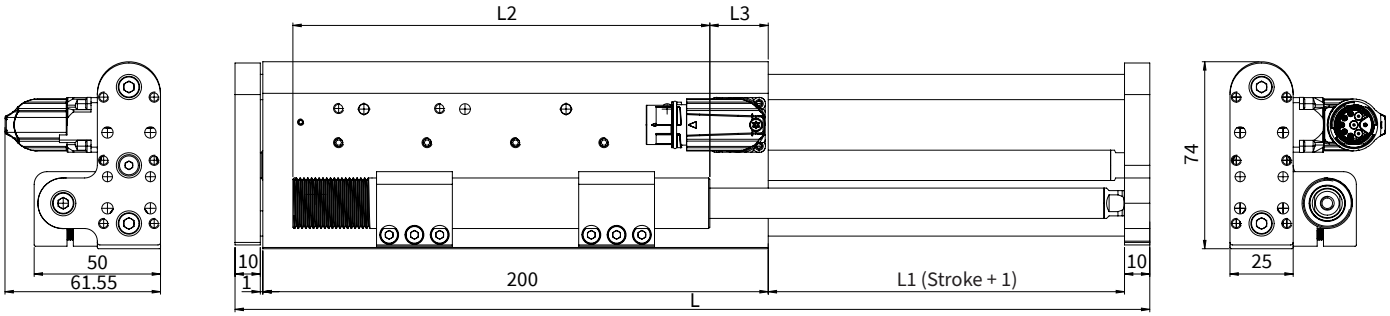

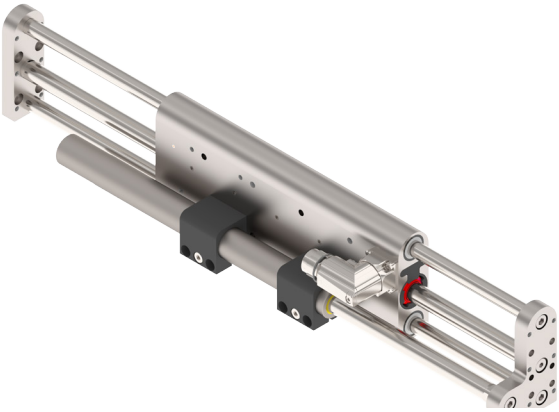

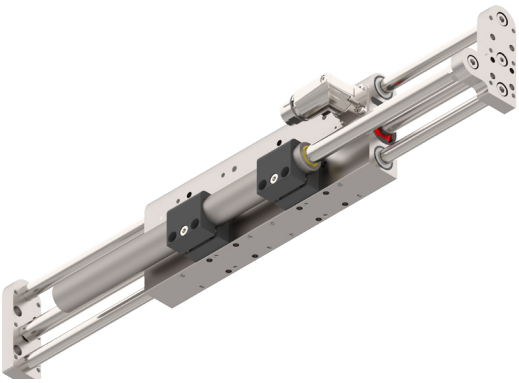

Dimensions in mm

Linear module with MagSpring	Stroke H [mm (inch)]		Length L3 [mm (inch)]		MS Stator length L2 [mm (inch)]		Carriage length L [mm (inch)]		Moving mass [1] [g (lb)]		Total weight [g (lb)]	
DM01-23x160H-XP-R-80_MSxx [2]	80	(3.15)	23	(0.91)	110	(4.33)	301	(11.85)	790	(1.74)	1940	(4.28)
DM01-23x160H-XP-R-140_MSxx [2]	140	(5.51)	23	(0.91)	165	(5.51)	361	(14.21)	960	(2.12)	2170	(4.78)
DM01-23x160H-XP-R-210_MSxx [2]	210	(8.27)	39	(1.54)	220	(8.66)	431	(16.97)	1170	(2.58)	2490	(5.49)
DM01-23x160H-XP-R-270_MSxx [2]	270	(10.63)	40	(1.57)	300	(11.81)	491	(19.33)	1360	(3.00)	2780	(6.13)

[1] Masse: Mass: Slider, Shafts, Front plate, Front plate back, MagSpring slider
[2] MagSpring variants with different constant forces
MS11: Constant force 11N (Eff. load compensation depending on moving mass)
MS12: Constant force 17N (Eff. load compensation depending on moving mass)
MS13: Constant force 22N (Eff. load compensation depending on moving mass)

MATERIALS

Guide Block & Front Plate	Guide Shaft	Bearing	Wipers
Anodized Aluminum	Hardened steel, hard chrome-plated, ø 10 mm	Linear ball bearing	H-ECOPUR

PERFORMANCE DATA DM01-23x160

Performance Data Linear Module DM01-23x160				
Stroke				
Max. Stroke	mm	(in)	270	(10.63)
Force				
Max. Force @ 48VDC	N	(lbf)	137.3	(30.9)
Max. Force @ 72VDC	N	(lbf)	137.3	(30.9)
Max. Cont. Force [Passive cooling/ Fan / Fluid]	N	(lbf)	32.7 / 50.1 / -	(7.4 / 11.3 / -)
Force Constant	N/A_{pk}	(lbf/A_{pk})	13.6	(3.07)
Position Detection				
Position Resolution	mm	(in)	0.002	(0.0001)
Repeatability	mm	(in)	±0.05	(±0.002)
Position Resolution with ES	mm	(in)	-	(-)
Repeatability with ES	mm	(in)	-	(-)
Electrical Data				
Max. Current @ 48VDC	A_{pk}		7.4	
Max. Current @ 72VDC	A_{pk}		7.4	
Max. Cont. Current [Passive cooling /Fan / Fluid]	A_{pk}		2.0 / 2.8 / -	
Terminal Resistance 25 °C / 120 °C	Ohm		4.2 / 6.2	
Terminal Inductivity	mH		0.6	
Magnetic Period	mm	(in)	20	(0.78)
Thermal Data				
Max. Winding Temperature (Sensor)	°C		120	
Thermal Resistance [Passive cooling / Fan / Fluid]	K/W		3.17 / 1.69 / -	
Thermal Time Constant [Passive cooling / Fan / Fluid]	s		300 / 200 / -	
Mechanical Data				
Stator Diameter	mm	(in)	23	(0.91)
Slider Diameter	mm	(in)	12	(0.47)
IP Code			IP 64 S	
Certification				
cURus	File-No.		E354430	

13

CONNECTOR

Motor Connector Wiring	R-Connector	Wire Color Motor Cable
Ph 1+	1	red
Ph 1-	2	pink
Ph 2+	3	blue
Ph 2-	4	grey
+5VDC	A	white
GND	B	inner Shield
Sinus	C	yellow
Cosinus	D	green
Temp.	E	black
Shield	Case	outer Shield

R-Connector

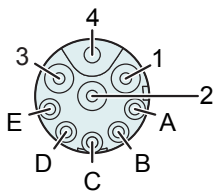

View: Motor connector, plug side
Material: nickel plated
IP Code: IP 67

MAXIMUM LOAD

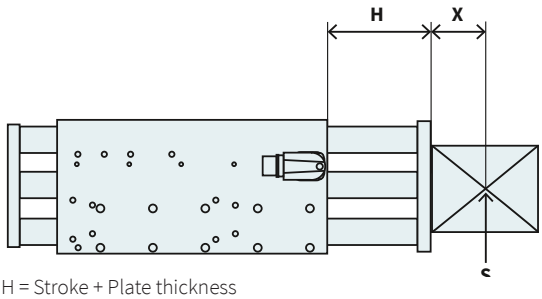

H = Stroke + Plate thickness
X = Distance to center of gravity
S = Center of gravity
Cantilever extension = H + X

The maximum load depends on the cantilever extension (distance H plus distance between the center of gravity of the working load and the mounting surface).

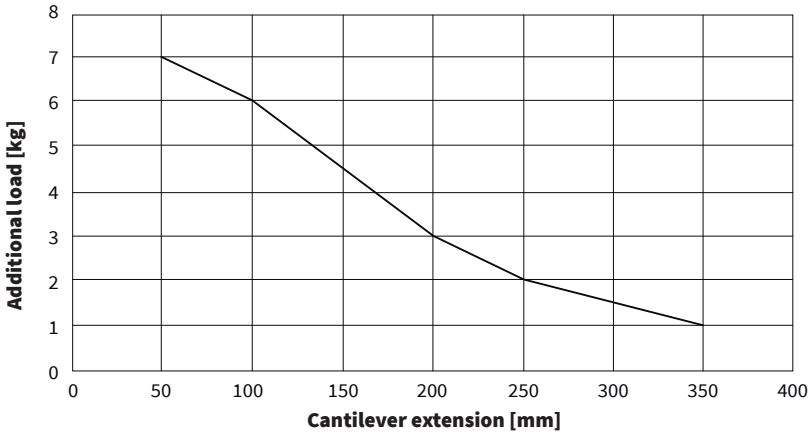

VERTICAL DEFLECTION

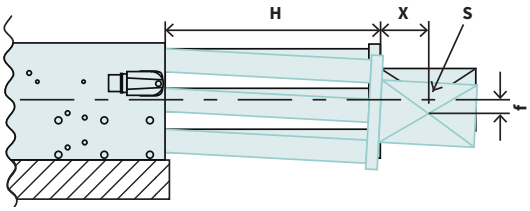

H = Stroke + Plate thickness
S = Center of gravity
X = Distance to center of gravity
f = Deflection of theoretical axis

Total deflection =
Static deflection + deflection under load
(Deflection measured at standstill)

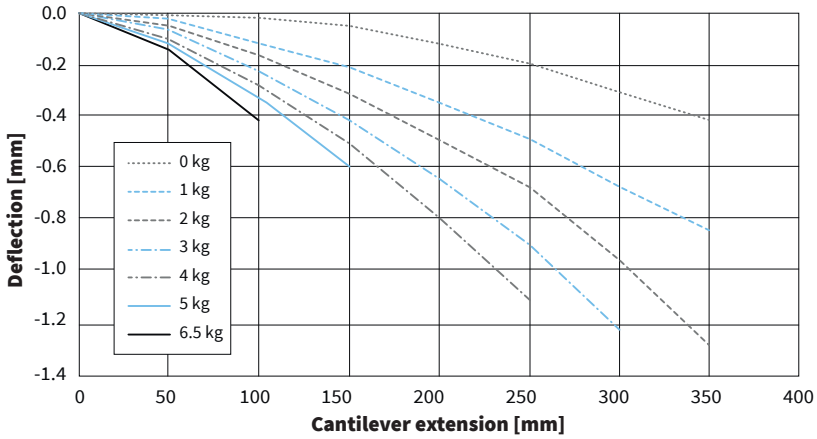

ORDERING INFORMATION

Item	Description	Item-No.
DM01-23x160H-XP-R-80	Linear Module, Stroke max. 80mm	0150-6112
DM01-23x160H-XP-R-80_MS11	Linear Module with MagSpring 11N, Stroke max. 80mm	0150-6110
DM01-23x160H-XP-R-80_MS12	Linear Module with MagSpring 17N, Stroke max. 80mm	0150-6216
DM01-23x160H-XP-R-80_MS13	Linear Module with MagSpring 22N, Stroke max. 80mm	0150-6217
DM01-23x160H-XP-R-140	Linear Module, Hub max. 140mm	0150-6231
DM01-23x160H-XP-R-140_MS11	Linear Module with MagSpring 11N, Stroke max. 140mm	0150-6218
DM01-23x160H-XP-R-140_MS12	Linear Module with MagSpring 17N, Stroke max. 140mm	0150-6223
DM01-23x160H-XP-R-140_MS13	Linear Module with MagSpring 22N, Stroke max. 140mm	0150-6224
DM01-23x160H-XP-R-210	Linear Module, Hub max. 210mm	0150-6233
DM01-23x160H-XP-R-210_MS11	Linear Module with MagSpring 11N, Stroke max. 210mm	0150-6225
DM01-23x160H-XP-R-210_MS12	Linear Module with MagSpring 17N, Stroke max. 210mm	0150-6226
DM01-23x160H-XP-R-210_MS13	Linear Module with MagSpring 22N, Stroke max. 210mm	0150-6227
DM01-23x160H-XP-R-270	Linear Module, Hub max. 270mm	0150-6235
DM01-23x160H-XP-R-270_MS11	Linear Module with MagSpring 11N, Stroke max. 270mm	0150-6228
DM01-23x160H-XP-R-270_MS12	Linear Module with MagSpring 17N, Stroke max. 270mm	0150-6229
DM01-23x160H-XP-R-270_MS13	Linear Module with MagSpring 22N, Stroke max. 270mm	0150-6230

Item	Description	Item-No.
DM01-23x160H-XP-R-80_BE03	Linear Module, Stroke max. 80mm - Clean room	0150-6107
DM01-23x160H-XP-R-140_BE03	Linear Module, Stroke max. 140mm - Clean room	0150-6232
DM01-23x160H-XP-R-210_BE03	Linear Module, Stroke max. 210mm - Clean room	0150-6234
DM01-23x160H-XP-R-270_BE03	Linear Module, Stroke max. 270mm - Clean room	0150-6236

LINEAR MODULE DM01-37x120

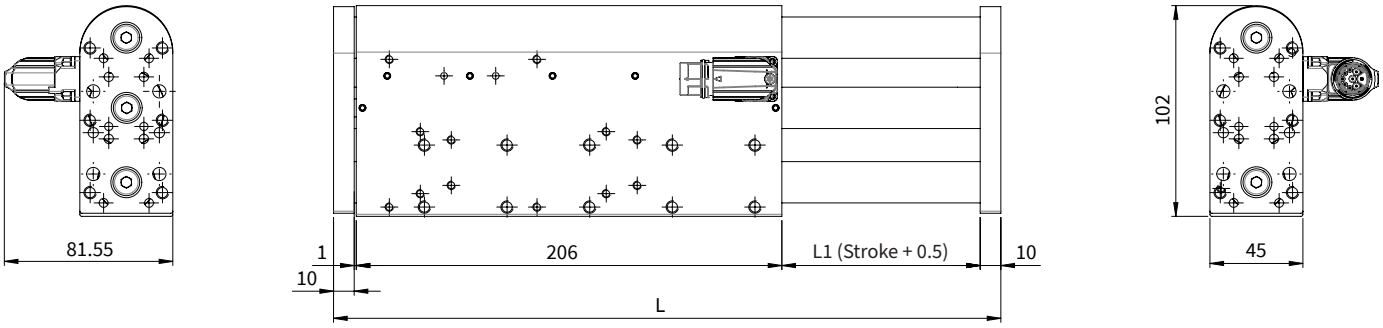

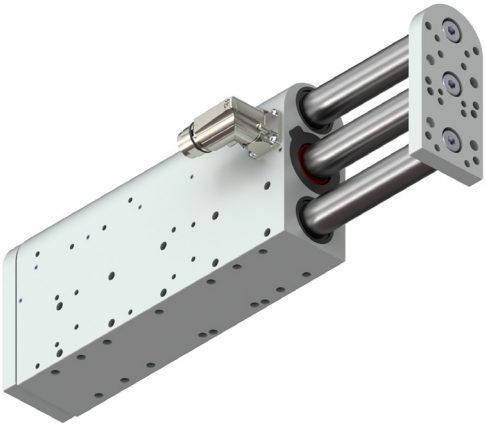

Dimensions in mm

Linear Module	Stroke H [mm (inch)]		Carriage length L [mm (inch)]		Moving mass [1] [g (lb)]		Total weight [g (lb)]	
DM01-37x120F-HP-R-95	95	(3.74)	323	(12.72)	1740	(3.83)	3700	(8.16)
DM01-37x120F-HP-R-195	195	(7.68)	423	(16.65)	2192	(4.83)	4172	(9.20)
DM01-37x120F-HP-R-295	295	(11.62)	523	(20.59)	2678	(5.90)	4658	(10.27)
DM01-37x120F-HP-R-395	395	(15.55)	623	(24.53)	3163	(6.97)	5144	(11.34)
DM01-37x120F-HP-R-495	495	(19.49)	723	(28.46)	3649	(8.04)	5630	(12.41)

[1] Mass: Slider, Shafts, Front plate, Front plate back

MATERIALS

Guide Block & Front Plate	Guide Shaft	Bearing	Wipers
Anodized Aluminum	Hardened steel, hard chrome-plated, ø 20 mm	Linear ball bearing	H-ECOPUR

LINEAR MODULE DM01-37x120_MSxx WITH VERTICAL LOAD COMPENSATION MAGSPRING®

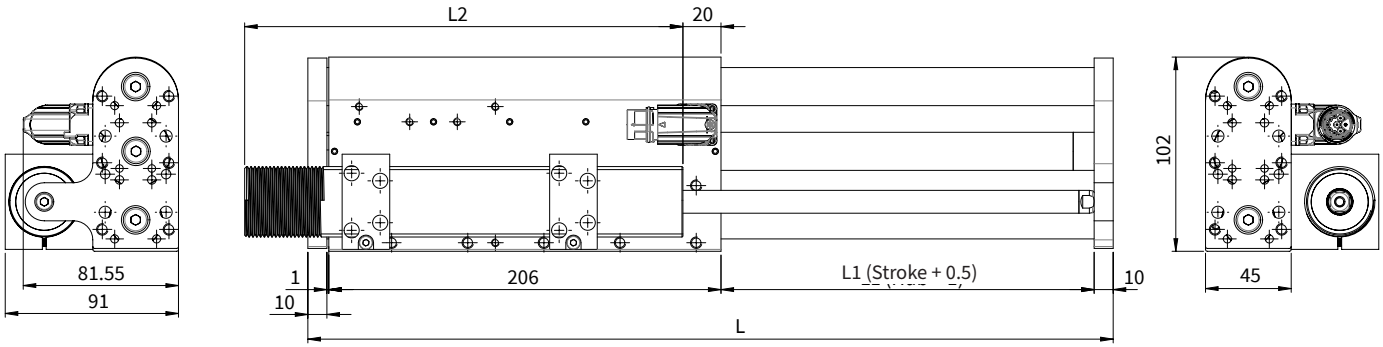

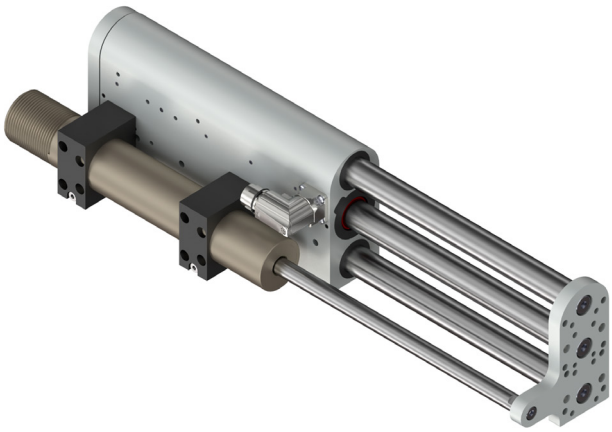

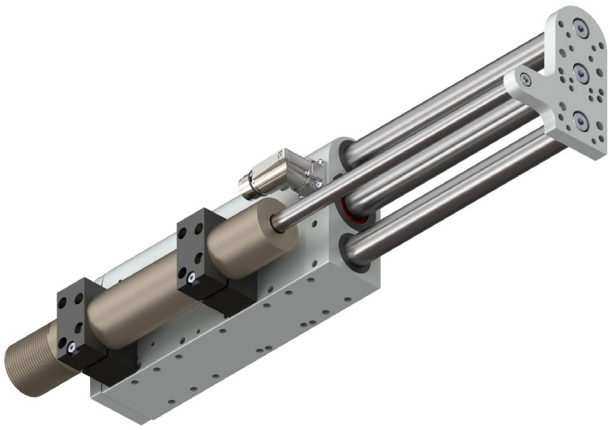

Dimensions in mm

Linear module with MagSpring	Stroke H [mm (inch)]		MS Stator length L2 [mm (inch)]		Carriage length L [mm (inch)]		Moving mass [1] [g (lb)]		Total weight [g (lb)]	
DM01-37x120F-HP-R-95_MSxx [2]	95	(3.74)	155	(6.10)	323	(12.72)	1857	(4.09)	4858	(10.71)
DM01-37x120F-HP-R-195_MSxx [2]	195	(7.68)	230	(9.05)	423	(16.65)	2469	(5.44)	6009	(13.24)
DM01-37x120F-HP-R-295_MSxx [2]	295	(11.62)	305	(12.01)	523	(20.59)	3055	(6.73)	7037	(15.51)

[1] Mass: Slider, Shafts, Front plate, Front plate back, MagSpring slider
[2] MagSpring variants with different constant forces
MS02: Constant force 40N (Eff. load compensation depending on moving mass)
MS03: Constant force 50N (Eff. load compensation depending on moving mass)
MS04: Constant force 60N (Eff. load compensation depending on moving mass)

MATERIALS

Guide Block & Front Plate	Guide Shaft	Bearing	Wipers
Anodized Aluminum	Hardened steel, hard chrome-plated, ø 20 mm	Linear ball bearing	H-ECOPUR

PERFORMANCE DATA DM01-37x120

Performance Data Linear Module DM01-37x120				
Stroke				
Max. Stroke	mm	(in)	495	(19.49)
Force				
Max. Force @ 48VDC	N	(lbf)	255	(57.3)
Max. Force @ 72VDC	N	(lbf)	255	(57.3)
Max. Cont. Force [Passive cooling/ Fan / Fluid]	N	(lbf)	62 / 87 / -	(14.2 / 20 / -)
Force Constant	N/A_{pk}	(lbf/A_{pk})	17	(3.82)
Position Detection				
Position Resolution	mm	(in)	0.005	(0.0002)
Repeatability	mm	(in)	±0.05	(±0.002)
Position Resolution with ES	mm	(in)	-	(-)
Repeatability with ES	mm	(in)	-	(-)
Electrical Data				
Max. Current @ 48VDC	A_{pk}		14.9	
Max. Current @ 72VDC	A_{pk}		14.9	
Max. Cont. Current [Passive cooling /Fan / Fluid]	A_{pk}		3.6 / 5.1 / -	
Terminal Resistance 25 °C / 120 °C	Ohm		2.4 / 3.5	
Terminal Inductivity	mH		1.6	
Magnetic Period	mm	(in)	40	(1.57)
Thermal Data				
Max. Winding Temperature (Sensor)	°C		120	
Thermal Resistance [Passive cooling / Fan / Fluid]	K/W		1.7 / 0.87 / -	
Thermal Time Constant [Passive cooling / Fan / Fluid]	s		600 / 200 / -	
Mechanical Data				
Stator Diameter	mm	(in)	37	(1.5)
Slider Diameter	mm	(in)	20	(0.79)
IP Code			IP 64 S	
Certification				
cURus	File-No.		E354430	

13

CONNECTOR

Motor Connector Wiring	R-Stecker	Wire Color Motor Cable
Ph 1+	1	red
Ph 1-	2	pink
Ph 2+	3	blue
Ph 2-	4	grey
+5VDC	A	white
GND	B	inner Shield
Sinus	C	yellow
Cosinus	D	green
Temp.	E	black
Shield	Geh.	outer Shield

R-Connector

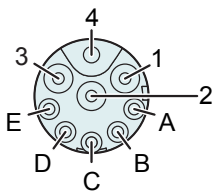

View: Motor connector, plug side
Material: nickel plated
IP Code: IP 67

MAXIMUM LOAD

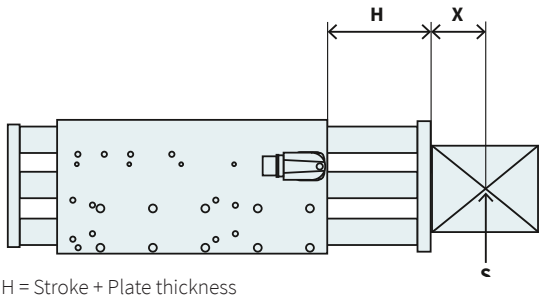

H = Stroke + Plate thickness
X = Distance to center of gravity
S = Center of gravity
Cantilever extension = H + X

The maximum load depends on the cantilever extension (distance H plus distance between the center of gravity of the working load and the mounting surface).

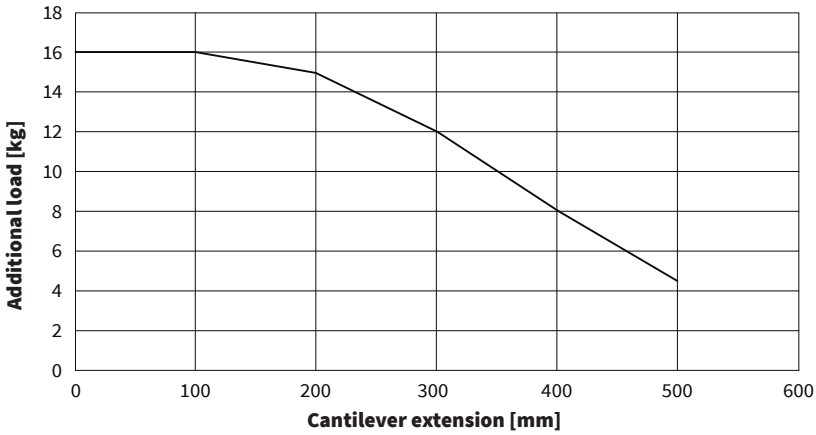

VERTICAL DEFLECTION

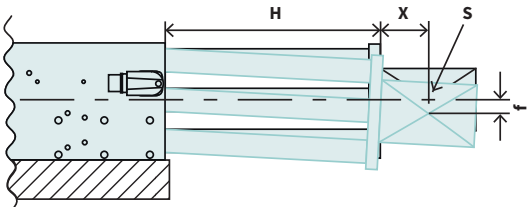

H = Stroke + Plate thickness
S = Center of gravity
X = Distance to center of gravity
f = Deflection of theoretical axis

Total deflection =
Static deflection + deflection under load
(Deflection measured at standstill)

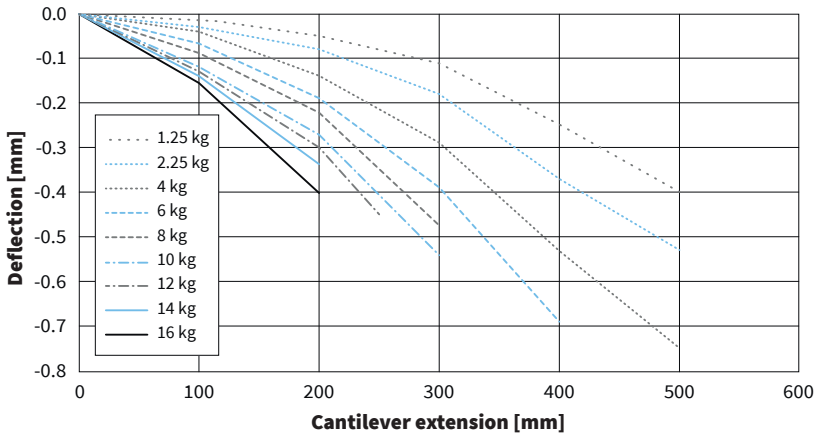

ORDERING INFORMATION

Item	Description	Item-No.
DM01-37x120F-HP-R-95	Linear Module, Stroke max 95mm	0150-4013
DM01-37x120F-HP-R-95_MS02	Linear Module with MagSpring 40N, Stroke max 95mm	0150-4074
DM01-37x120F-HP-R-95_MS03	Linear Module with MagSpring 50N, Stroke max 95mm	0150-4075
DM01-37x120F-HP-R-95_MS04	Linear Module with MagSpring 60N, Stroke max 95mm	0150-4076
DM01-37x120F-HP-R-195	Linear Module, Stroke max 195mm	0150-4014
DM01-37x120F-HP-R-195_MS02	Linear Module with MagSpring 40N, Stroke max 195mm	0150-4027
DM01-37x120F-HP-R-195_MS03	Linear Module with MagSpring 50N, Stroke max 195mm	0150-4028
DM01-37x120F-HP-R-195_MS04	Linear Module with MagSpring 60N, Stroke max 195mm	0150-4029
DM01-37x120F-HP-R-295	Linear Module, Stroke max 295mm	0150-4015
DM01-37x120F-HP-R-295_MS02	Linear Module with MagSpring 40N, Stroke max 295mm	0150-4030
DM01-37x120F-HP-R-295_MS03	Linear Module with MagSpring 50N, Stroke max 295mm	0150-4031
DM01-37x120F-HP-R-295_MS04	Linear Module with MagSpring 60N, Stroke max 295mm	0150-4032
DM01-37x120F-HP-R-395	Linear Module, Stroke max 395mm	0150-4016
DM01-37x120F-HP-R-495	Linear Module, Stroke max 495mm	0150-4017

Item	Description	Item-No.
DM01-37x120F-HP-R-95-2S	Linear Module, Stroke max 95mm - Safety Encoder	0150-24013
DM01-37x120F-HP-R-95_MS02-2S	Linear Module with MagSpring 40N, Stroke max 95mm - Safety Encoder	0150-24074
DM01-37x120F-HP-R-95_MS03-2S	Linear Module with MagSpring 50N, Stroke max 95mm - Safety Encoder	0150-24075
DM01-37x120F-HP-R-95_MS04-2S	Linear Module with MagSpring 60N, Stroke max 95mm - Safety Encoder	0150-24076
DM01-37x120F-HP-R-195-2S	Linear Module, Stroke max 195mm - Safety Encoder	0150-24014
DM01-37x120F-HP-R-195_MS02-2S	Linear Module with MagSpring 40N, Stroke max 195mm - Safety Encoder	0150-24027
DM01-37x120F-HP-R-195_MS03-2S	Linear Module with MagSpring 50N, Stroke max 195mm - Safety Encoder	0150-24028
DM01-37x120F-HP-R-195_MS04-2S	Linear Module with MagSpring 60N, Stroke max 195mm - Safety Encoder	0150-24029
DM01-37x120F-HP-R-295-2S	Linear Module, Stroke max 295mm - Safety Encoder	0150-24015
DM01-37x120F-HP-R-295_MS02-2S	Linear Module with MagSpring 40N, Stroke max 295mm - Safety Encoder	0150-24030
DM01-37x120F-HP-R-295_MS03-2S	Linear Module with MagSpring 50N, Stroke max 295mm - Safety Encoder	0150-24031
DM01-37x120F-HP-R-295_MS04-2S	Linear Module with MagSpring 60N, Stroke max 295mm - Safety Encoder	0150-24032
DM01-37x120F-HP-R-395-2S	Linear Module, Stroke max 395mm - Safety Encoder	0150-24016
DM01-37x120F-HP-R-495-2S	Linear Module, Stroke max 495mm - Safety Encoder	0150-24017

Item	Description	Item-No.
DM01-37x120F-HP-R-95_BE03	Linear Module, Stroke max 95mm - Clean Room	0150-4627
DM01-37x120F-HP-R-195_BE03	Linear Module, Stroke max 195mm - Clean Room	0150-4429
DM01-37x120F-HP-R-295_BE03	Linear Module, Stroke max 295mm - Clean Room	0150-4375
DM01-37x120F-HP-R-395_BE03	Linear Module, Stroke max 395mm - Clean Room	0150-4430
DM01-37x120F-HP-R-495_BE03	Linear Module, Stroke max 495mm - Clean Room	0150-4628
DM01-37x120F-HP-R-95_BE03-2S	Linear Module, Stroke max 95mm - Clean Room & Safety Encoder	0150-24627
DM01-37x120F-HP-R-195_BE03-2S	Linear Module, Stroke max 195mm - Clean Room & Safety Encoder	0150-24429
DM01-37x120F-HP-R-295_BE03-2S	Linear Module, Stroke max 295mm - Clean Room & Safety Encoder	0150-24375
DM01-37x120F-HP-R-395_BE03-2S	Linear Module, Stroke max 395mm - Clean Room & Safety Encoder	0150-24430
DM01-37x120F-HP-R-495_BE03-2S	Linear Module, Stroke max 495mm - Clean Room & Safety Encoder	0150-24628

LINEAR MODULE DM01-37x120_EN02 WITH ABSOLUTE ENCODER

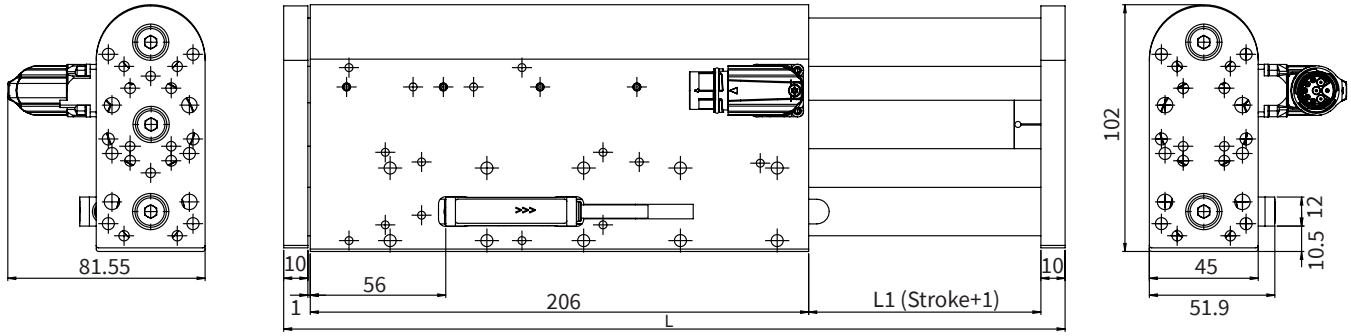

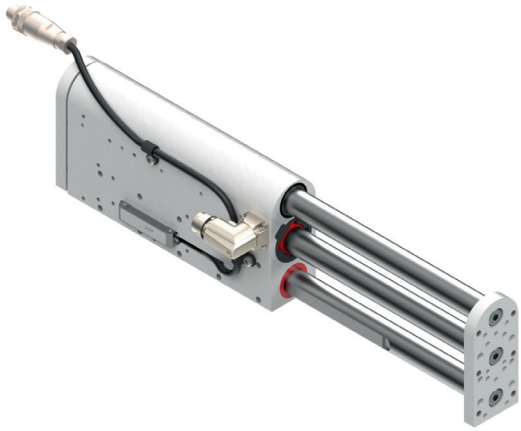

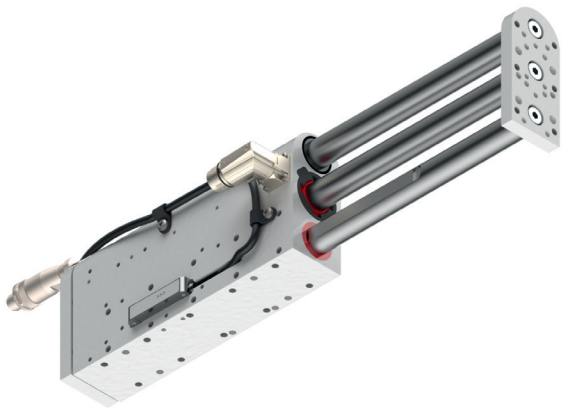

Dimensions in mm

Linear Module with Absolute Encoder	Stroke H [mm (inch)]		Carriage length L [mm (inch)]		Moving mass [1] [g (lb)]		Total weight [g (lb)]	
DM01-37x120F-HP-R-95_EN02	95	(3.74)	323	(12.72)	2065	(4.55)	4025	(8.87)
DM01-37x120F-HP-R-195_EN02	195	(7.68)	423	(16.65)	2576	(5.68)	4556	(10.04)
DM01-37x120F-HP-R-295_EN02	295	(11.62)	523	(20.59)	3148	(6.94)	5128	(11.31)
DM01-37x120F-HP-R-395_EN02	395	(15.55)	623	(24.53)	3770	(8.31)	5751	(12.68)
DM01-37x120F-HP-R-495_EN02	495	(19.49)	723	(28.46)	4350	(9.59)	6331	(13.96)

[1] Mass: Slider, Shafts, Front plate, Front plate back

13

MATERIALS

Guide Block & Front Plate	Guide Shaft	Bearing	Wipers
Anodized Aluminum	Hardened steel, hard chrome-plated, ø 20 mm	Linear ball bearing	H-ECOPUR

LINEAR MODULE DM01-37X120_MSxx_EN02 WITH VERTICAL LOAD COMPENSATION AND ABSOLUTE ENCODER

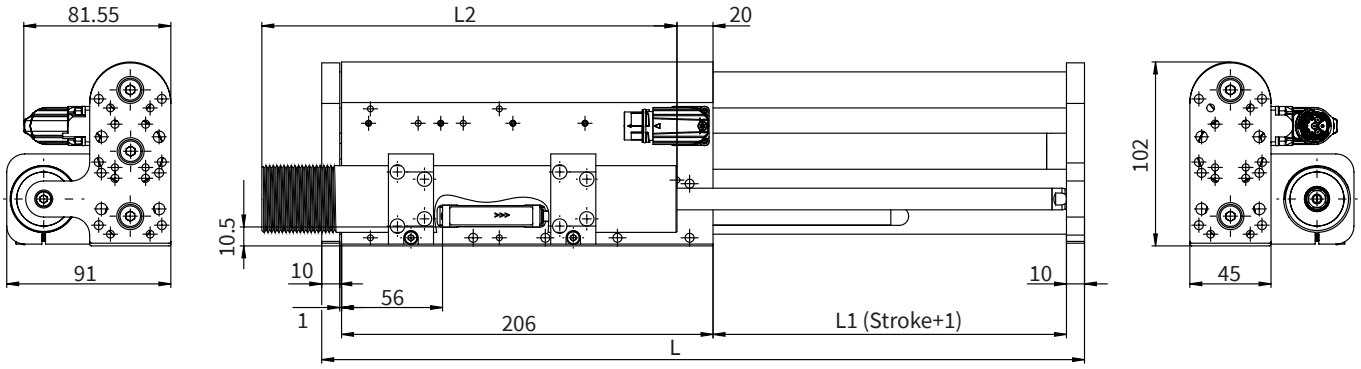

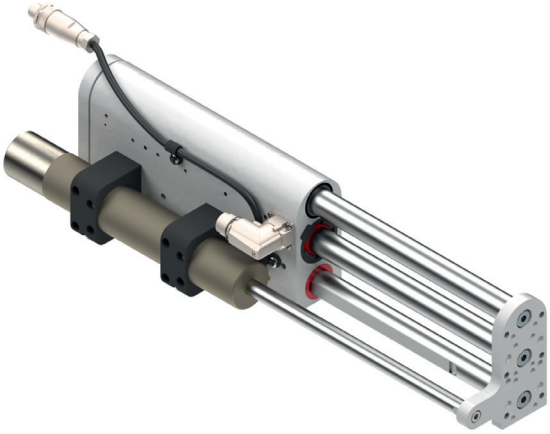

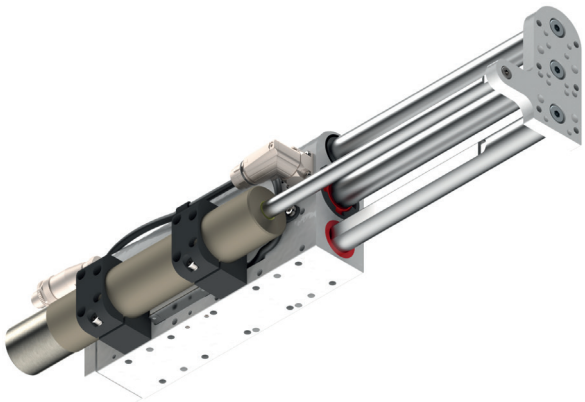

Dimensions in mm

Linear Module with MagSpring & Absolute Encoder	Stroke H [mm (inch)]		MS Stator length L2 [mm (inch)]		Carriage length L [mm (inch)]		Moving mass [1] [g (lb)]		Total weight [g (lb)]	
DM01-37x120F-HP-R-95_MSxx_EN02 [2]	95	(3.74)	155	(6.10)	323	(12.72)	2182	(4.81)	5183	(11.43)
DM01-37x120F-HP-R-195_MSxx_EN02 [2]	195	(7.68)	230	(9.05)	423	(16.65)	2852	(6.29)	6393	(14.09)
DM01-37x120F-HP-R-295_MSxx_EN02 [2]	295	(11.62)	305	(12.01)	523	(20.59)	3525	(7.77)	7507	(16.55)

[1] Mass: Slider, Shafts, Front plate, Front plate back, MagSpring slider
[2] MagSpring variants with different constant forces
MS02: Constant force 40N (Eff. load compensation depending on moving mass)
MS03: Constant force 50N (Eff. load compensation depending on moving mass)
MS04: Constant force 60N (Eff. load compensation depending on moving mass)

MATERIALS

Guide Block & Front Plate	Guide Shaft	Bearing	Wipers
Anodized Aluminum	Hardened steel, hard chrome-plated, ø 20 mm	Linear ball bearing	H-ECOPUR

PERFORMANCE DATA DM01-37x120_EN02 WITH ABSOLUTE ENCODER

Performance Data Linear Module DM01-37x120_EN02 with absolute encoder				
Stroke				
Max. Stroke	mm	(in)	495	(19.49)
Force				
Max. Force @ 48VDC	N	(lbf)	255	(57.3)
Max. Force @ 72VDC	N	(lbf)	255	(57.3)
Max. Cont. Force [Passive cooling/ Fan / Fluid]	N	(lbf)	62 / 87 / -	(14.2 / 20 / -)
Force Constant	N/A_{pk}	(lbf/A_{pk})	17	(3.82)
Position Detection				
Position Resolution with ES	mm	(in)	0.001	(0.00004)
Repeatability with ES	mm	(in)	0.001	(0.00004)
Electrical Data				
Max. Current @ 48VDC	A_{pk}		14.9	
Max. Current @ 72VDC	A_{pk}		14.9	
Max. Cont. Current [Passive cooling /Fan / Fluid]	A_{pk}		3.6 / 5.1 / -	
Terminal Resistance 25 °C / 120 °C	Ohm		2.4 / 3.5	
Terminal Inductivity	mH		1.6	
Magnetic Period	mm	(in)	40	(1.57)
Thermal Data				
Max. Winding Temperature (Sensor)	°C		120	
Thermal Resistance [Passive cooling / Fan / Fluid]	K/W		1.7 / 0.87 / -	
Thermal Time Constant [Passive cooling / Fan / Fluid]	s		600 / 200 / -	
Mechanical Data				
Stator Diameter	mm	(in)	37	(1.5)
Slider Diameter	mm	(in)	20	(0.79)
IP Code			IP 64 S	
Certification				
cURus	File-No.		E354430	

CONNECTOR

Motor Connector Wiring	R-Stecker	Wire Color Motor Cable
Ph 1+	1	red
Ph 1-	2	pink
Ph 2+	3	blue
Ph 2-	4	grey
+5VDC	A	white
GND	B	inner Shield
Sinus	C	yellow
Cosinus	D	green
Temp.	E	black
Shield	Geh.	outer Shield

R-Connector

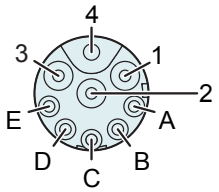

View: Motor connector, plug side
Material: nickel plated
IP Code: IP 67

MAXIMUM LOAD

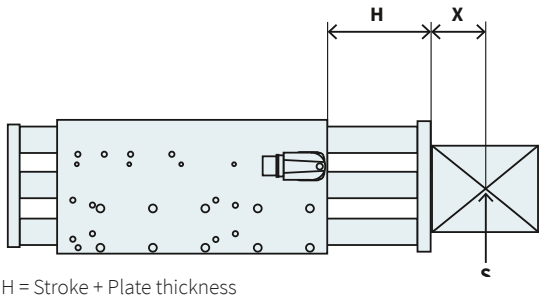

H = Stroke + Plate thickness
X = Distance to center of gravity
S = Center of gravity
Cantilever extension = H + X

The maximum load depends on the cantilever extension (distance H plus distance between the center of gravity of the working load and the mounting surface).

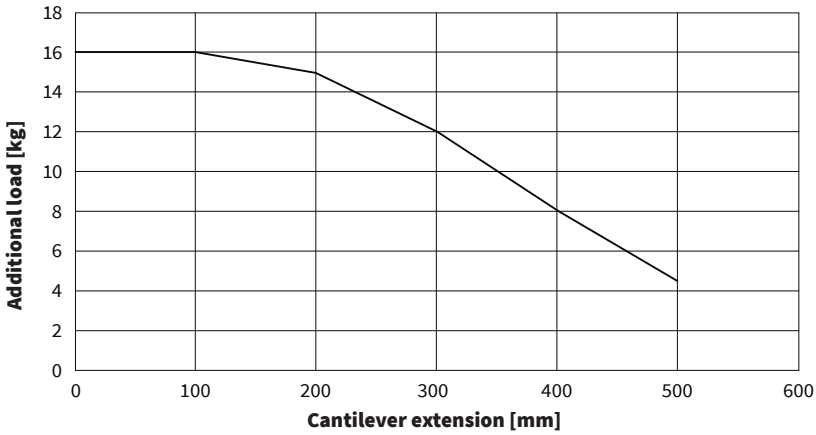

VERTICAL DEFLECTION

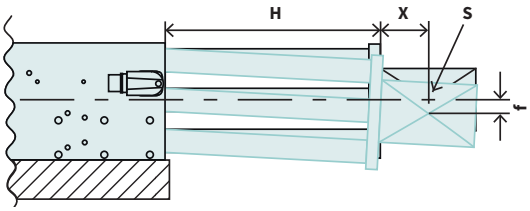

H = Stroke + Plate thickness
S = Center of gravity
X = Distance to center of gravity
f = Deflection of theoretical axis

Total deflection =
Static deflection + deflection under load
(Deflection measured at standstill)

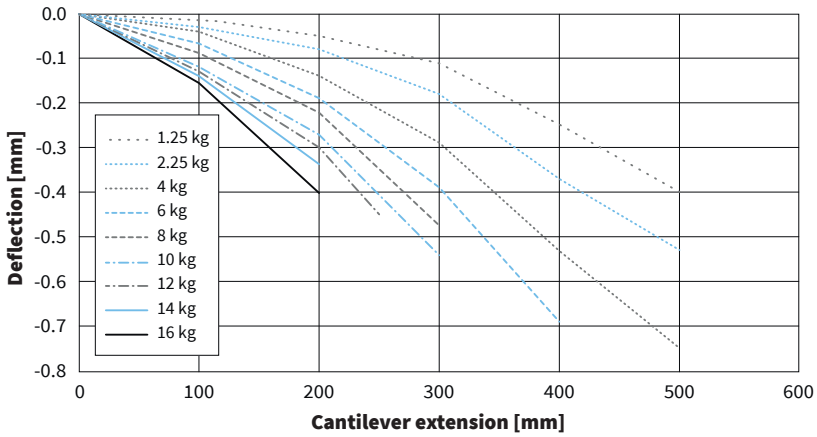

ORDERING INFORMATION

Item	Description	Item-No.
DM01-37x120F-HP-R-95_EN02	Linear Module with Absolute Encoder, Stroke max 95mm	0150-5813
DM01-37x120F-HP-R-95_MS02_EN02	Linear Module with MagSpring 40N and Absolute Encoder, Stroke max 95mm	0150-5891
DM01-37x120F-HP-R-95_MS03_EN02	Linear Module with MagSpring 50N and Absolute Encoder, Stroke max 95mm	0150-5892
DM01-37x120F-HP-R-95_MS04_EN02	Linear Module with MagSpring 60N and Absolute Encoder, Stroke max 95mm	0150-5893
DM01-37x120F-HP-R-195_EN02	Linear Module with Absolute Encoder, Stroke max 195mm	0150-5851
DM01-37x120F-HP-R-195_MS02_EN02	Linear Module with MagSpring 40N and Absolute Encoder, Stroke max 195mm	0150-5894
DM01-37x120F-HP-R-195_MS03_EN02	Linear Module with MagSpring 50N and Absolute Encoder, Stroke max 195mm	0150-5895
DM01-37x120F-HP-R-195_MS04_EN02	Linear Module with MagSpring 60N and Absolute Encoder, Stroke max 195mm	0150-5695
DM01-37x120F-HP-R-295_EN02	Linear Module with Absolute Encoder, Stroke max 295mm	0150-5856
DM01-37x120F-HP-R-295_MS02_EN02	Linear Module with MagSpring 40N and Absolute Encoder, Stroke max 295mm	0150-5896
DM01-37x120F-HP-R-295_MS03_EN02	Linear Module with MagSpring 50N and Absolute Encoder, Stroke max 295mm	0150-5897
DM01-37x120F-HP-R-295_MS04_EN02	Linear Module with MagSpring 60N and Absolute Encoder, Stroke max 295mm	0150-5898
DM01-37x120F-HP-R-395_EN02	Linear Module with Absolute Encoder, Stroke max 395mm	0150-5857
DM01-37x120F-HP-R-495_EN02	Linear Module with Absolute Encoder, Stroke max 495mm	0150-5858

Item	Description	Item-No.
DM01-37x120F-HP-R-95_EN02-2S	Linear Module with Absolute Encoder and Safety Encoder, Stroke max 95mm	0150-25813
DM01-37x120F-HP-R-95_MS02_EN02-2S	Linear Module with MagSpring 40N, Absolute Encoder and Safety Encoder, Stroke max 95mm	0150-25891
DM01-37x120F-HP-R-95_MS03_EN02-2S	Linear Module with MagSpring 50N, Absolute Encoder and Safety Encoder, Stroke max 95mm	0150-25892
DM01-37x120F-HP-R-95_MS04_EN02-2S	Linear Module with MagSpring 60N, Absolute Encoder and Safety Encoder, Stroke max 95mm	0150-25893
DM01-37x120F-HP-R-195_EN02-2S	Linear Module with Absolute Encoder and Safety Encoder, Stroke max 195mm	0150-25851
DM01-37x120F-HP-R-195_MS02_EN02-2S	Linear Module with MagSpring 40N, Absolute Encoder and Safety Encoder, Stroke max 195mm	0150-25894
DM01-37x120F-HP-R-195_MS03_EN02-2S	Linear Module with MagSpring 50N, Absolute Encoder and Safety Encoder, Stroke max 195mm	0150-25895
DM01-37x120F-HP-R-195_MS04_EN02-2S	Linear Module with MagSpring 60N, Absolute Encoder and Safety Encoder, Stroke max 195mm	0150-25695
DM01-37x120F-HP-R-295_EN02-2S	Linear Module with Absolute Encoder and Safety Encoder, Stroke max 295mm	0150-25856
DM01-37x120F-HP-R-295_MS02_EN02-2S	Linear Module with MagSpring 40N, Absolute Encoder and Safety Encoder, Stroke max 295mm	0150-25896
DM01-37x120F-HP-R-295_MS03_EN02-2S	Linear Module with MagSpring 50N, Absolute Encoder and Safety Encoder, Stroke max 295mm	0150-25897
DM01-37x120F-HP-R-295_MS04_EN02-2S	Linear Module with MagSpring 60N, Absolute Encoder and Safety Encoder, Stroke max 295mm	0150-25898
DM01-37x120F-HP-R-395_EN02-2S	Linear Module with Absolute Encoder and Safety Encoder, Stroke max 395mm	0150-25857
DM01-37x120F-HP-R-495_EN02-2S	Linear Module with Absolute Encoder and Safety Encoder, Stroke max 495mm	0150-25858

LINEAR MODULE DM01-48x150_CS01

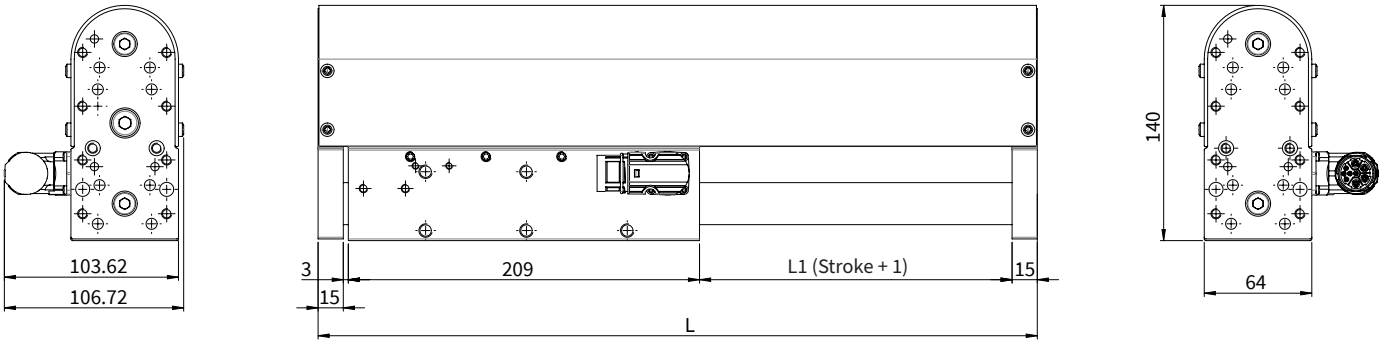

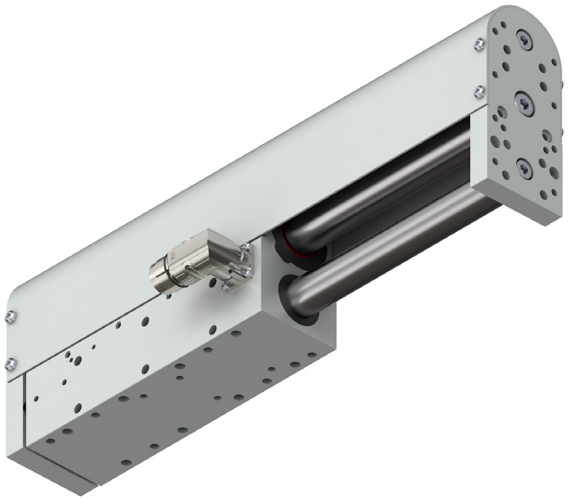

Dimensions in mm

Linear module	Stroke H [mm (inch)]		Carriage length L [mm (inch)]		Moving mass [1] [g (lb)]		Total weight [g (lb)]	
DM01-48x150G-HP-C-125_CS01	125	(4.92)	368	(14.49)	4158	(9.16)	8033	(17.71)
DM01-48x150G-HP-C-185_CS01	185	(7.28)	428	(16.85)	4668	(10.29)	8542	(18.83)
DM01-48x150G-HP-C-275_CS01	275	(10.83)	518	(20.39)	5577	(12.29)	9451	(20.83)
DM01-48x150G-HP-C-395_CS01	395	(15.55)	638	(25.12)	6790	(14.97)	10664	(23.51)
DM01-48x150G-HP-C-485_CS01	485	(19.09)	728	(28.66)	7702	(19.98)	11576	(25.52)
DM01-48x150G-HP-C-575_CS01	575	(22.64)	818	(32.20)	8608	(18.97)	12483	(27.52)

[1] Mass: Slider, Shafts, Front plate, Front plate back

MATERIALS

Guide Block & Front Plate	Guide Shaft	Bearing	Wipers
Anodized Aluminum	Hardened steel, hard chrome-plated, ø 25 mm	Linear ball bearing	H-ECOPUR

LINEAR MODULE DM01-48x150_CS01_BK01 WITH HOLDING BRAKE

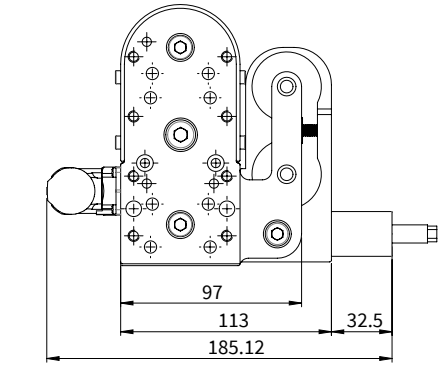

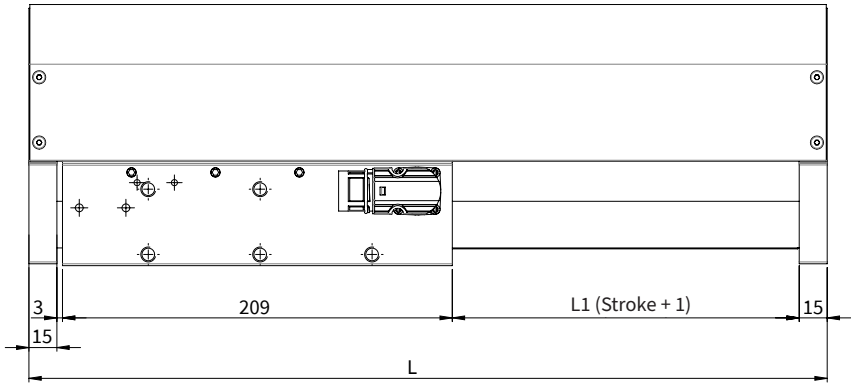

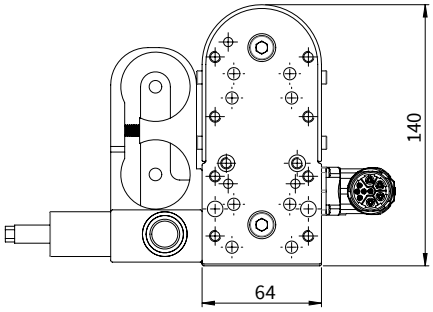

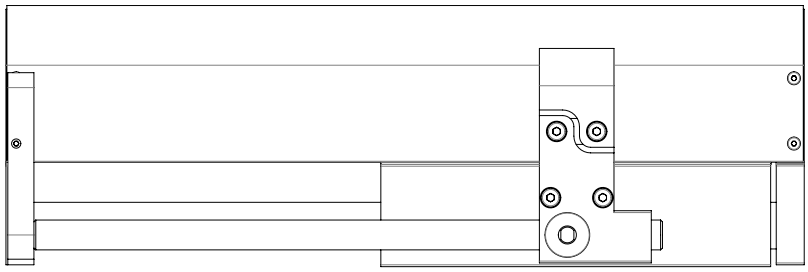

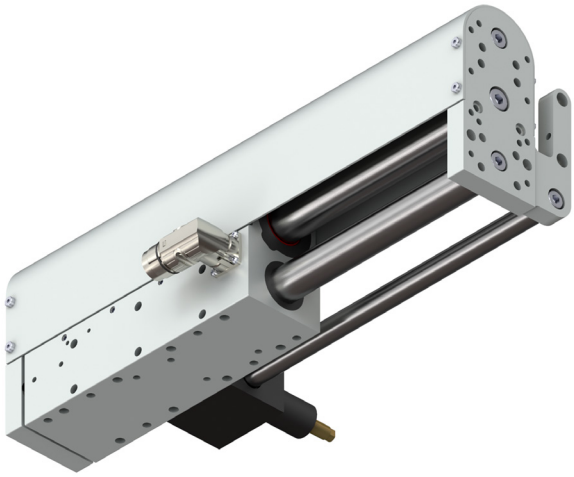

Dimensions in mm

Linear module with holding brake	Stroke H [mm (inch)]		Carriage length L [mm (inch)]		Moving mass [1] [g (lb)]		Total weight [g (lb)]	
DM01-48x150G-HP-C-125_CS01_BK01 [2]	125	(4.92)	368	(14.49)	4688	(10.33)	8957	(19.74)
DM01-48x150G-HP-C-185_CS01_BK01 [2]	185	(7.28)	428	(16.85)	5307	(11.69)	9576	(21.11)
DM01-48x150G-HP-C-275_CS01_BK01 [2]	275	(10.83)	518	(20.39)	6407	(14.12)	10676	(23.53)

[1] Mass: Slider, Shafts, Front plate, Front plate back, Brake shaft
[2] Pneumatic holding brake with max. holding force 1000 N

MATERIALS

Guide Block & Front Plate	Guide Shaft	Bearing	Wipers
Anodized Aluminum	Hardened steel, hard chrome-plated, ø 25 mm	Linear ball bearing	H-ECOPUR

LINEAR MODULE DM01-48x150_CS01_MS08 WITH VERTICAL LOAD COMPENSATION MAGSPRING®

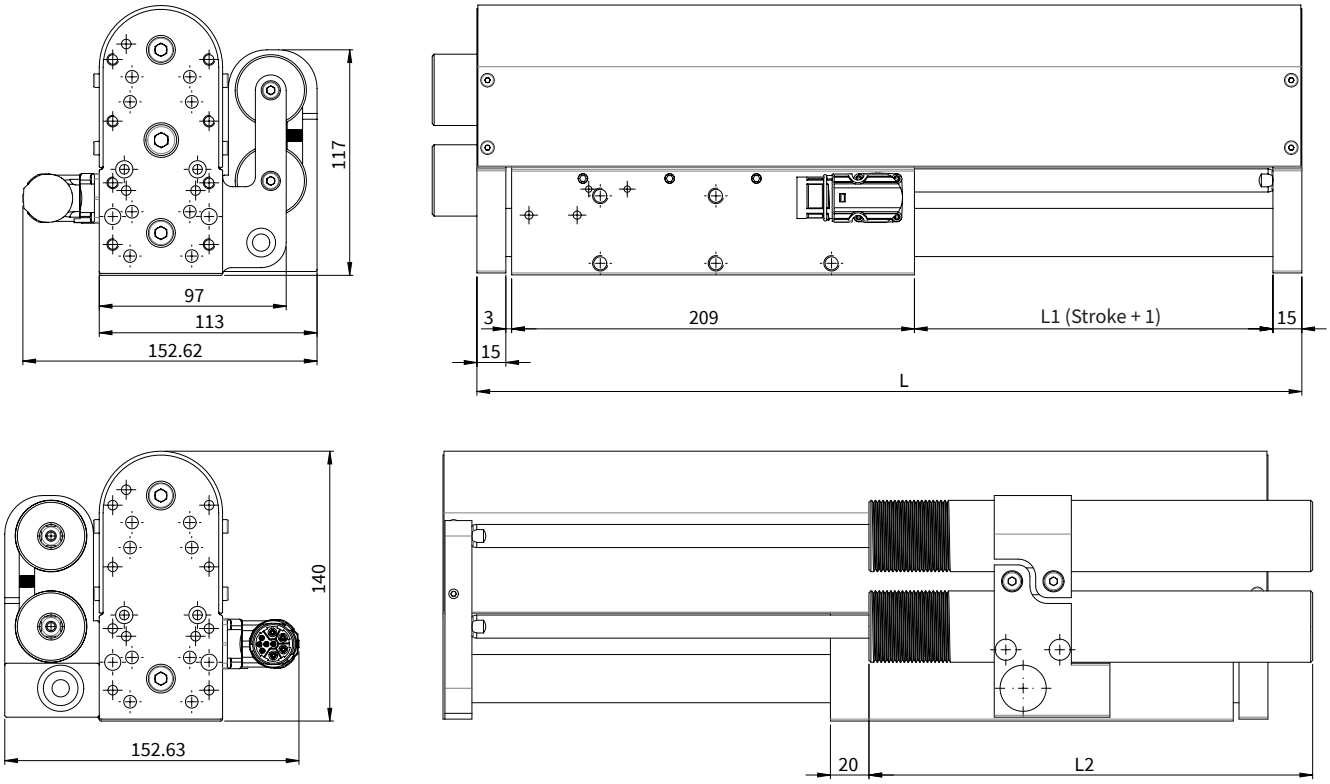

Dimensions in mm

Linear module with MagSpring	Stroke H [mm (inch)]		MS Stator length L2 [mm (inch)]		Carriage length L [mm (inch)]		Moving mass [1] [g (lb)]		Total weight [g (lb)]	
DM01-48x150G-HP-C-125_CS01_MS08 [2]	125	(4.92)	155	(6.10)	368	(14.49)	4690	(10.34)	10699	(23.59)
DM01-48x150G-HP-C-185_CS01_MS08 [2]	185	(7.28)	230	(9.06)	428	(16.85)	5407	(11.92)	12276	(27.06)
DM01-48x150G-HP-C-275_CS01_MS08 [2]	275	(10.83)	305	(12.0)	518	(20.39)	6517	(14.37)	14266	(31.45)

[1] Mass: Slider, Shafts, Front plate, Front plate back, MagSpring slider
[2] MagSpring with constant force 120 N (Eff. load compensation depending on moving mass)

MATERIALS

Guide Block & Front Plate	Guide Shaft	Bearing	Wipers
Anodized Aluminum	Hardened steel, hard chrome-plated, ø 25 mm	Linear ball bearing	H-ECOPUR

LINEAR MODULE DM01-48x150_CS01_MS08_BK01 WITH VERTICAL LOAD COMPENSATION AND HOLDING BRAKE

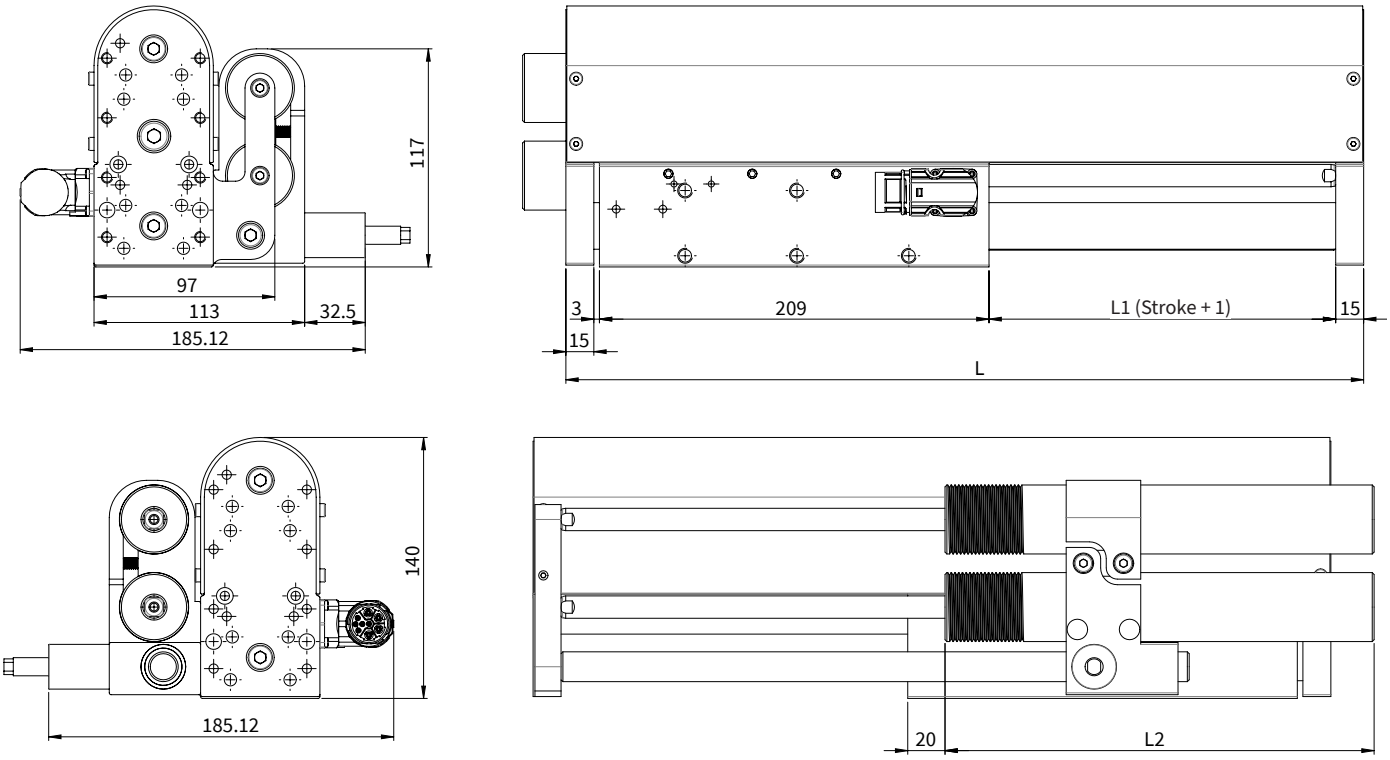

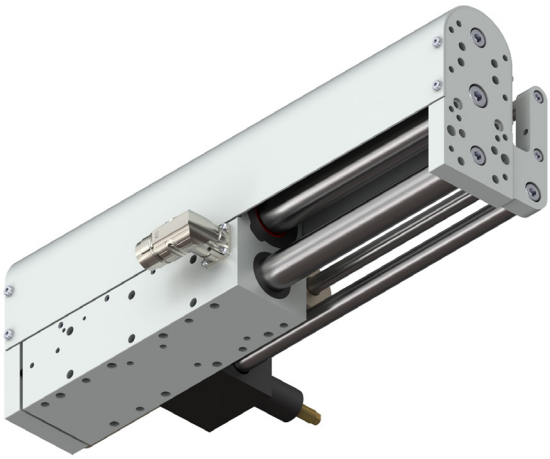

Dimensions in mm

Linear module with MagSpring + Holding brake	Stroke H [mm (inch)]		MS Stator length L2 [mm (inch)]		Carriage length L [mm (inch)]		Moving mass [1] [g (lb)]		Total weight [g (lb)]	
DM01-48x150G-HP-C-125_CS01_MS08_BK01 [2]	125	(4.92)	155	(6.10)	368	(14.49)	5120	(11.29)	11229	(24.75)
DM01-48x150G-HP-C-185_CS01_MS08_BK01 [2]	185	(7.28)	230	(9.06)	428	(16.85)	5947	(13.11)	12936	(28.52)
DM01-48x150G-HP-C-275_CS01_MS08_BK01 [2]	275	(10.83)	305	(12.0)	518	(20.39)	7247	(15.97)	15116	(33.32)

[1] Mass: Slider, Shafts, Front plate, Front plate back, Brake shaft, MagSpring slider
[2] MagSpring with constant force 120 N (Eff. load compensation depending on moving mass), Pneumatic holding brake with max. holding force 1000 N

MATERIALS

Guide Block & Front Plate	Guide Shaft	Bearing	Wipers
Anodized Aluminum	Hardened steel, hard chrome-plated, ø 25 mm	Linear ball bearing	H-ECOPUR

PERFORMANCE DATA DM01-48x150

Performance Data Linear Module DM01-48x150				
Stroke				
Max. Stroke	mm	(in)	575	(22.64)
Force				
Max. Force @ 48VDC	N	(lbf)	360	(80.9)
Max. Force @ 72VDC	N	(lbf)	360	(80.9)
Max. Cont. Force [Passive cooling / Fan / Fluid]	N	(lbf)	112 / 150 / -	(25.6 / 34.3 / -)
Force Constant	N/A_{pk}	(lbf/A_{pk})	15.65	(3.51)
Position Detection				
Position Resolution	mm	(in)	0.007	(0.0003)
Repeatability	mm	(in)	±0.05	(±0.002)
Position Resolution with ES	mm	(in)	-	(-)
Repeatability with ES	mm	(in)	-	(-)
Electrical Data				
Max. Current @ 48VDC	A_{pk}		23.0	
Max. Current @ 72VDC	A_{pk}		23.0	
Max. Cont. Current [Passive cooling /Fan / Fluid]	A_{pk}		7.2 / 9.6 / -	
Terminal Resistance 25 °C / 120 °C	Ohm		0.81 / 1.2	
Terminal Inductivity	mH		0.7	
Magnetic Period	mm	(in)	60	(2.35)
Thermal Data				
Max. Winding Temperature (Sensor)	°C		120	
Thermal Resistance [Passive cooling / Fan / Fluid]	K/W		1.3 / 0.73 / -	
Thermal Time Constant [Passive cooling / Fan / Fluid]	s		850 / 300 / -	
Mechanical Data				
Stator Diameter	mm	(in)	48	(1.9)
Slider Diameter	mm	(in)	28	(1.1)
IP Code			IP 64 S	
Certification				
cURus	File-No.		E354430	

CONNECTOR

Motor Connector Wiring	C-Stecker	Wire Color Motor Cable
Ph 1+	A	red
Ph 1-	B	pink
Ph 2+	C	blue
Ph 2-	D	grey
+5VDC	E	white
GND	F	inner Shield
Sinus	G	yellow
Cosinus	H	green
Temp.	L	black
Shield	Case	outer Shield

C-Connector

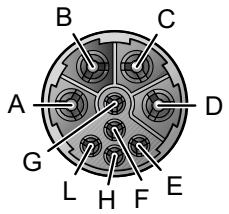

View: Motor connector, plug side
Material: nickel plated
IP Code: IP 67

MAXIMUM LOAD

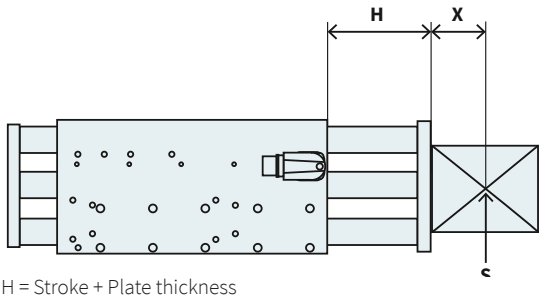

H = Stroke + Plate thickness
X = Distance to center of gravity
S = Center of gravity
Cantilever extension = H + X

The maximum load depends on the cantilever extension (distance H plus distance between the center of gravity of the working load and the mounting surface).

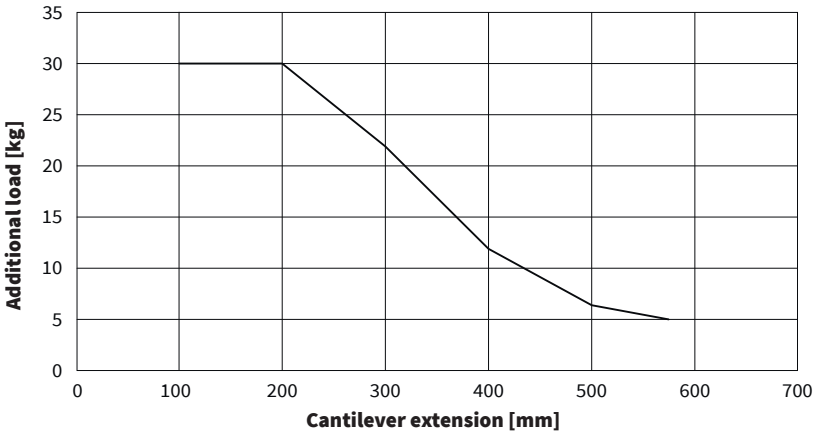

VERTICAL DEFLECTION

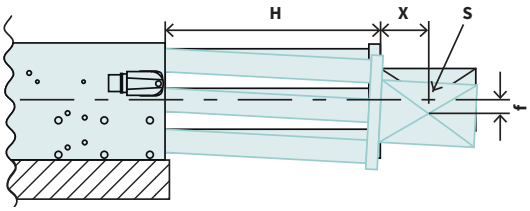

H = Stroke + Plate thickness
S = Center of gravity
X = Distance to center of gravity
f = Deflection of theoretical axis

Total deflection =
Static deflection + deflection under load
(Deflection measured at standstill)

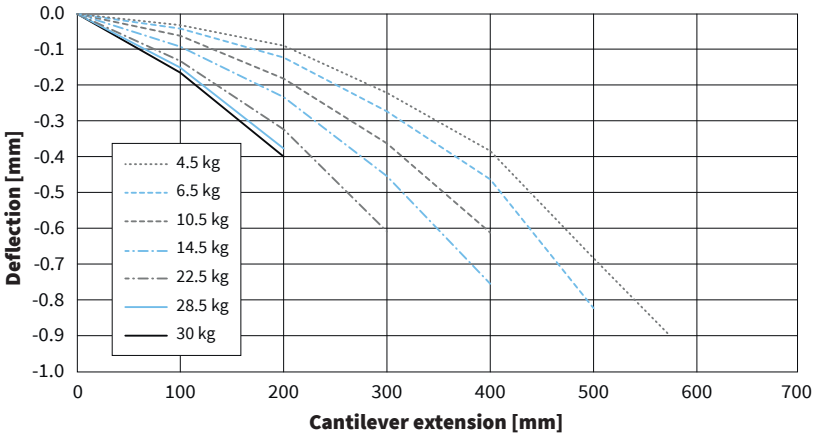

ORDERING INFORMATION

Item	Description	Item-No.
DM01-48x150G-HP-C-125_CS01	Linear Module, Stroke max 125mm	0150-4173
DM01-48x150G-HP-C-125_CS01_BK01	Linear Module with pneumatic holding brake, Stroke max 125mm	0150-4202
DM01-48x150G-HP-C-125_CS01_MS08	Linear Module with MagSpring 120N, Stroke max 125mm	0150-4200
DM01-48x150G-HP-C-125_CS01_MS08_BK01	Linear Module with MagSpring 120N and pneumatic holding brake, Stroke max 125mm	0150-4201
DM01-48x150G-HP-C-185_CS01	Linear Module, Stroke max 185mm	0150-4174
DM01-48x150G-HP-C-185_CS01_BK01	Linear Module with pneumatic holding brake, Stroke max 185mm	0150-4205
DM01-48x150G-HP-C-185_CS01_MS08	Linear Module with MagSpring 120N, Stroke max 185mm	0150-4203
DM01-48x150G-HP-C-185_CS01_MS08_BK01	Linear Module with MagSpring 120N and pneumatic holding brake, Stroke max 185mm	0150-4204
DM01-48x150G-HP-C-275_CS01	Linear Module, Stroke max 275mm	0150-4175
DM01-48x150G-HP-C-275_CS01_BK01	Linear Module with pneumatic holding brake, Stroke max 275mm	0150-4206
DM01-48x150G-HP-C-275_CS01_MS08	Linear Module with MagSpring 120N, Stroke max 275mm	0150-4208
DM01-48x150G-HP-C-275_CS01_MS08_BK01	Linear Module with MagSpring 120N and pneumatic holding brake, Stroke max 275mm	0150-4207
DM01-48x150G-HP-C-395_CS01	Linear Module, Stroke max 395mm	0150-4176
DM01-48x150G-HP-C-485_CS01	Linear Module, Stroke max 485mm	0150-4177
DM01-48x150G-HP-C-575_CS01	Linear Module, Stroke max 575mm	0150-4178

Item	Description	Item-No.
DM01-48x150G-HP-C-125_CS01-2S	Linear Module, Stroke max 125mm - Safety Encoder	0150-24173
DM01-48x150G-HP-C-125_CS01_BK01-2S	Linear Module with pneumatic holding brake, Stroke max 125mm - Safety Encoder	0150-24202
DM01-48x150G-HP-C-125_CS01_MS08-2S	Linear Module with MagSpring 120N, Stroke max 125mm - Safety Encoder	0150-24200
DM01-48x150G-HP-C-125_CS01_MS08_BK01-2S	Linear Module with MagSpring 120N and pneumatic holding brake, Stroke max 125mm - Safety Encoder	0150-24201
DM01-48x150G-HP-C-185_CS01-2S	Linear Module, Stroke max 185mm - Safety Encoder	0150-24174
DM01-48x150G-HP-C-185_CS01_BK01-2S	Linear Module with pneumatic holding brake, Stroke max 185mm - Safety Encoder	0150-24205
DM01-48x150G-HP-C-185_CS01_MS08-2S	Linear Module with MagSpring 120N, Stroke max 185mm - Safety Encoder	0150-24203
DM01-48x150G-HP-C-185_CS01_MS08_BK01-2S	Linear Module with MagSpring 120N and pneumatic holding brake, Stroke max 185mm - Safety Encoder	0150-24204
DM01-48x150G-HP-C-275_CS01-2S	Linear Module, Stroke max 275mm - Safety Encoder	0150-24175
DM01-48x150G-HP-C-275_CS01_BK01-2S	Linear Module with pneumatic holding brake, Stroke max 275mm - Safety Encoder	0150-24206
DM01-48x150G-HP-C-275_CS01_MS08-2S	Linear Module with MagSpring 120N, Stroke max 275mm - Safety Encoder	0150-24208
DM01-48x150G-HP-C-275_CS01_MS08_BK01-2S	Linear Module with MagSpring 120N and pneumatic holding brake, Stroke max 275mm - Safety Encoder	0150-24207
DM01-48x150G-HP-C-395_CS01-2S	Linear Module, Stroke max 395mm - Safety Encoder	0150-24176
DM01-48x150G-HP-C-485_CS01-2S	Linear Module, Stroke max 485mm - Safety Encoder	0150-24177
DM01-48x150G-HP-C-575_CS01-2S	Linear Module, Stroke max 575mm - Safety Encoder	0150-24178

Item	Description	Item-No.
DM01-48x150G-HP-C-125_CS01_BE03	Linear Module, Stroke max 125mm - Clean Room	0150-4629
DM01-48x150G-HP-C-185_CS01_BE03	Linear Module, Stroke max 185mm - Clean Room	0150-4749
DM01-48x150G-HP-C-275_CS01_BE03	Linear Module, Stroke max 275mm - Clean Room	0150-4750
DM01-48x150G-HP-C-395_CS01_BE03	Linear Module, Stroke max 395mm - Clean Room	0150-4751
DM01-48x150G-HP-C-485_CS01_BE03	Linear Module, Stroke max 485mm - Clean Room	0150-4752
DM01-48x150G-HP-C-575_CS01_BE03	Linear Module, Stroke max 575mm - Clean Room	0150-4630

ORDERING INFORMATION

Item	Description	Item-No.
DM01-48x150G-HP-C-125_CS01_BE03-2S	Linear Module, Stroke max 125mm - Clean Room and Safety Encoder	0150-24629
DM01-48x150G-HP-C-185_CS01_BE03-2S	Linear Module, Stroke max 185mm - Clean Room and Safety Encoder	0150-24749
DM01-48x150G-HP-C-275_CS01_BE03-2S	Linear Module, Stroke max 275mm - Clean Room and Safety Encoder	0150-24750
DM01-48x150G-HP-C-395_CS01_BE03-2S	Linear Module, Stroke max 395mm - Clean Room and Safety Encoder	0150-24751
DM01-48x150G-HP-C-485_CS01_BE03-2S	Linear Module, Stroke max 485mm - Clean Room and Safety Encoder	0150-24752
DM01-48x150G-HP-C-575_CS01_BE03-2S	Linear Module, Stroke max 575mm - Clean Room and Safety Encoder	0150-24630

LINEAR MODULE DM01-48x240_CS01

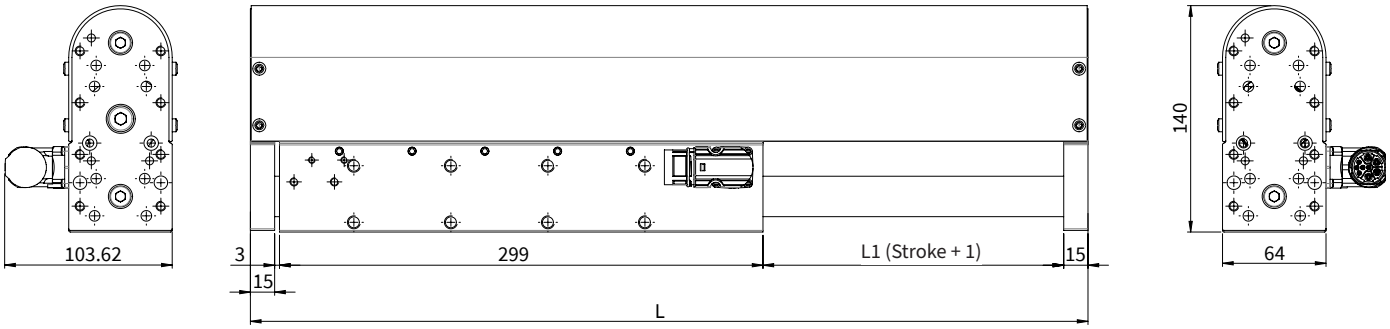

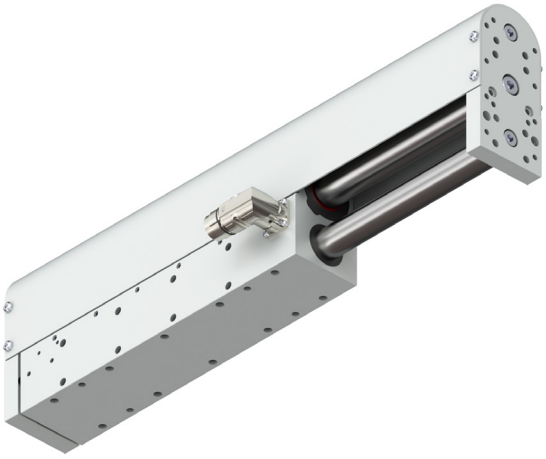

Dimensions in mm

Linear module	Stroke H [mm (inch)]		Carriage length L [mm (inch)]		Moving mass [1] [g (lb)]		Total weight [g (lb)]	
DM01-48x240F-HP-C-95_CS01	95	(3.74)	428	(16.85)	4668	(10.29)	9978	(21.99)
DM01-48x240F-HP-C-185_CS01	185	(7.28)	518	(20.39)	5577	(12.29)	11874	(26.18)
DM01-48x240F-HP-C-305_CS01	305	(12.0)	638	(25.12)	6790	(14.96)	12100	(26.67)
DM01-48x240F-HP-C-395_CS01	395	(15.55)	728	(28.66)	7702	(16.98)	13013	(28.69)
DM01-48x240F-HP-C-485_CS01	485	(19.09)	818	(32.20)	8608	(18.98)	13914	(30.68)

[1] Mass: Slider, Shafts, Front plate, Front plate back

13

MATERIALS

Guide Block & Front Plate	Guide Shaft	Bearing	Wipers
Anodized Aluminum	Hardened steel, hard chrome-plated, ø 25 mm	Linear ball bearing	H-ECOPUR

LINEAR MODULE DM01-48x240_CS01_BK01 WITH HOLDING BRAKE

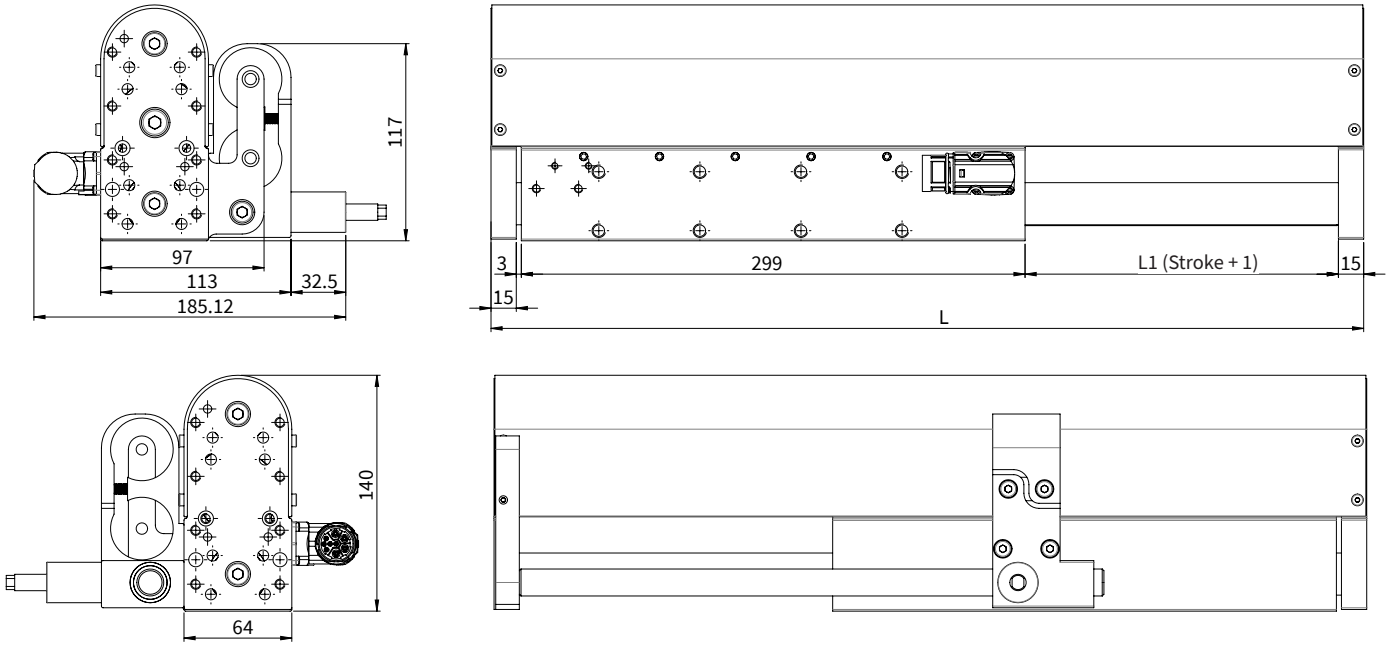

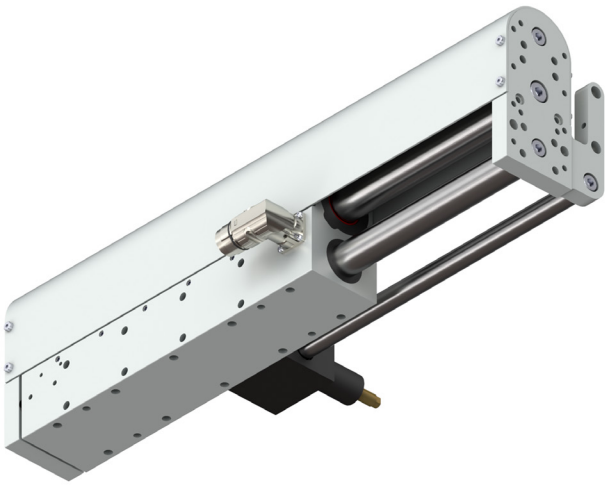

Dimensions in mm

Linear module with holding brake	Stroke H [mm (inch)]		Carriage length L [mm (inch)]		Moving mass [1] [g (lb)]		Total weight [g (lb)]	
DM01-48x240F-HP-C-95_CS01_BK01 [2]	95	(3.74)	428	(16.85)	4983	(10.98)	10689	(23.56)
DM01-48x240F-HP-C-185_CS01_BK01 [2]	185	(7.28)	518	(20.39)	5997	(13.22)	11702	(25.79)
DM01-48x240F-HP-C-305_CS01_BK01 [2]	305	(12.0)	638	(25.12)	7614	(16.79)	13325	(29.38)

[1] Mass: Slider, Shafts, Front plate, Front plate back, Brake shaft
[2] Pneumatic holding brake with max. holding force 1000 N

MATERIALS

Guide Block & Front Plate	Guide Shaft	Bearing	Wipers
Anodized Aluminum	Hardened steel, hard chrome-plated, ø 25 mm	Linear ball bearing	H-ECOPUR

LINEAR MODULE DM01-48x240_CS01_MS08 WITH VERTICAL LOAD COMPENSATION MAGSPRING®

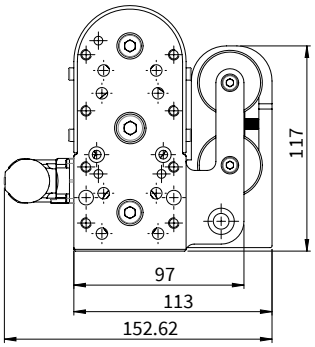

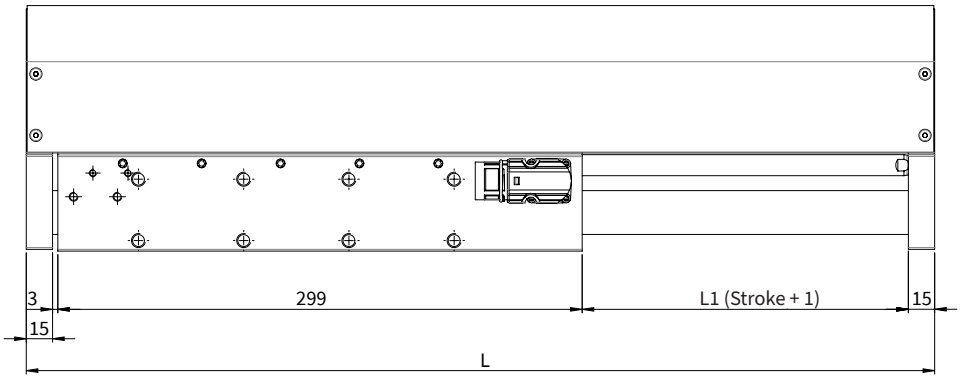

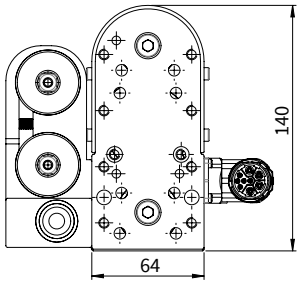

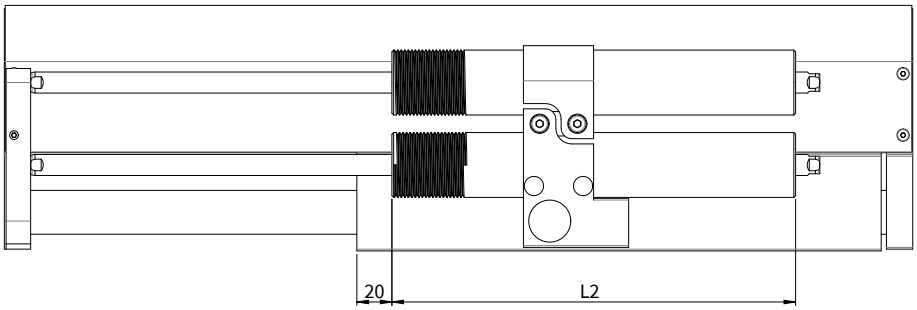

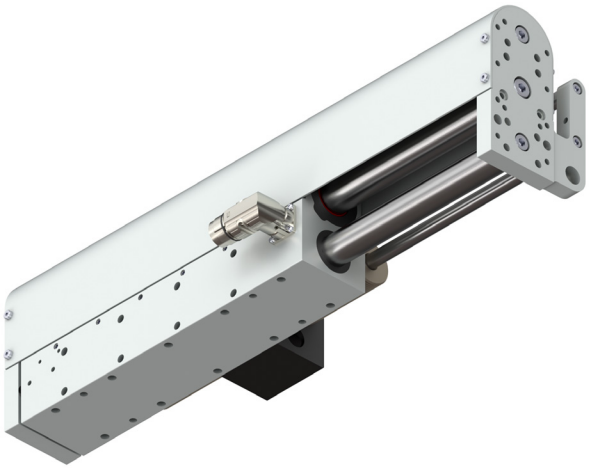

Dimensions in mm

Linear module with MagSpring	Stroke H [mm (inch)]		MS Stator length L2 [mm (inch)]		Carriage length L [mm (inch)]		Moving mass [1] [g (lb)]		Total weight [g (lb)]	
DM01-48x240F-HP-C-95_CS01_MS08 [2]	95	(3.74)	155	(6.10)	428	(16.85)	5199	(11.46)	12625	(27.83)
DM01-48x240F-HP-C-185_CS01_MS08 [2]	185	(7.28)	230	(9.06)	518	(20.39)	6317	(13.93)	14623	(32.23)
DM01-48x240F-HP-C-305_CS01_MS08 [2]	305	(12.0)	380	(14.96)	638	(25.12)	7729	(17.04)	16915	(37.29)

[1] Mass: Slider, Shafts, Front plate, Front plate back, MagSpring slider
[2] MagSpring with constant force 120 N, (Eff. load compensation depending on moving mass)

MATERIALS

Guide Block & Front Plate	Guide Shaft	Bearing	Wipers
Anodized Aluminum	Hardened steel, hard chrome-plated, ø 25 mm	Linear ball bearing	H-ECOPUR

LINEAR MODULE DM01-48x240_CS01_MS08_BK01 WITH VERTICAL LOAD COMPENSATION AND HOLDING BRAKE

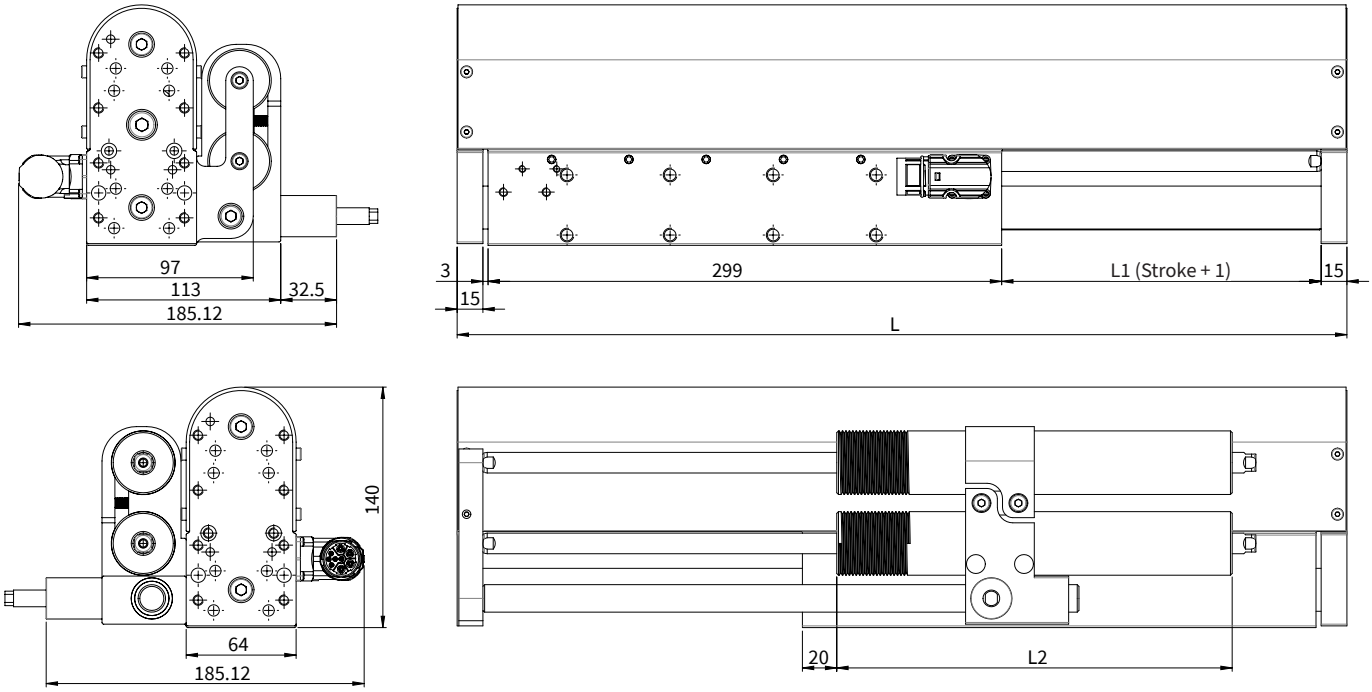

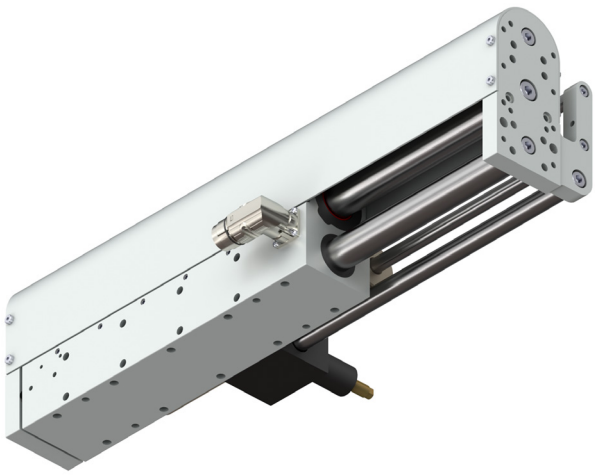

Dimensions in mm

Linear module with MagSpring + holding brake	Stroke H [mm (inch)]		MS Stator length L2 [mm (inch)]		Carriage length L [mm (inch)]		Moving mass [1] [g (lb)]		Total weight [g (lb)]	
DM01-48x240F-HP-C-95_CS01_MS08_BK01 [2]	95	(3.74)	155	(6.10)	428	(16.85)	5598	(12.34)	13144	(28.98)
DM01-48x240F-HP-C-185_CS01_MS08_BK01 [2]	185	(7.28)	230	(9.06)	518	(20.39)	6842	(15.08)	15267	(33.66)
DM01-48x240F-HP-C-305_CS01_MS08_BK01 [2]	305	(12.0)	380	(14.96)	638	(25.12)	8459	(18.64)	17765	(39.17)

[1] Mass: Slider, Shafts, Front plate, Front plate back, Brake shaft, MagSpring slider
[2] MagSpring with constant force 120 N (Eff. load compensation depending on moving mass), Pneumatic holding brake with max. holding force 1000 N

MATERIALS

Guide Block & Front Plate	Guide Shaft	Bearing	Wipers
Anodized Aluminum	Hardened steel, hard chrome-plated, ø 25 mm	Linear ball bearing	H-ECOPUR

PERFORMANCE DATA DM01-48x240

Performance Data Linear Module DM01-48x240				
Stroke				
Max. Stroke	mm	(in)	485	(19.09)
Force				
Max. Force @ 48VDC	N	(lbf)	572	(129)
Max. Force @ 72VDC	N	(lbf)	572	(129)
Max. Cont. Force [Passive cooling/ Fan / Fluid]	N	(lbf)	170 / 233 / -	(38 / 53.3 / -)
Force Constant	N/A_{pk}	(lbf/A_{pk})	22	(4.95)
Position Detection				
Position Resolution	mm	(in)	0.007	(0.0003)
Repeatability	mm	(in)	±0.05	(±0.002)
Position Resolution with ES	mm	(in)	-	(-)
Repeatability with ES	mm	(in)	-	(-)
Electrical Data				
Max. Current @ 48VDC	A_{pk}		25.9	
Max. Current @ 72VDC	A_{pk}		25.9	
Max. Cont. Current [Passive cooling /Fan / Fluid]	A_{pk}		7.7 / 10.6 / -	
Terminal Resistance 25 °C / 120 °C	Ohm		0.97 / 1.4	
Terminal Inductivity	mH		1.1	
Magnetic Period	mm	(in)	60	(2.35)
Thermal Data				
Max. Winding Temperature (Sensor)	°C		120	
Thermal Resistance [Passive cooling / Fan / Fluid]	K/W		0.94 / 0.5 / -	
Thermal Time Constant [Passive cooling / Fan / Fluid]	s		800 / 270 / -	
Mechanical Data				
Stator Diameter	mm	(in)	48	(1.9)
Slider Diameter	mm	(in)	28	(1.1)
IP Code			IP 64 S	
Certification				
cURus	File-No.		E354430	

CONNECTOR

Motor Connector Wiring	C-Stecker	Wire Color Motor Cable
Ph 1+	A	red
Ph 1-	B	pink
Ph 2+	C	blue
Ph 2-	D	grey
+5VDC	E	white
GND	F	inner Shield
Sinus	G	yellow
Cosinus	H	green
Temp.	L	black
Shield	Case	outer Shield

C-Connector

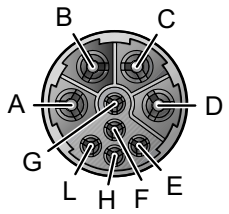

View: Motor connector, plug side
Material: nickel plated
IP Code: IP 67

MAXIMUM LOAD

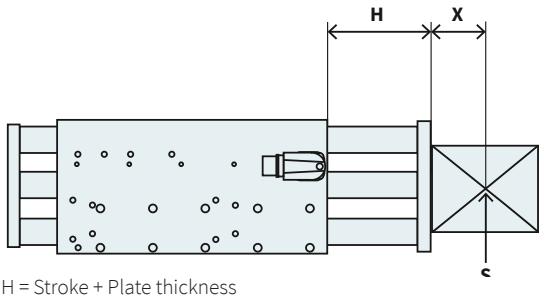

H = Stroke + Plate thickness
X = Distance to center of gravity
S = Center of gravity
Cantilever extension = H + X

The maximum load depends on the cantilever extension (distance H plus distance between the center of gravity of the working load and the mounting surface).

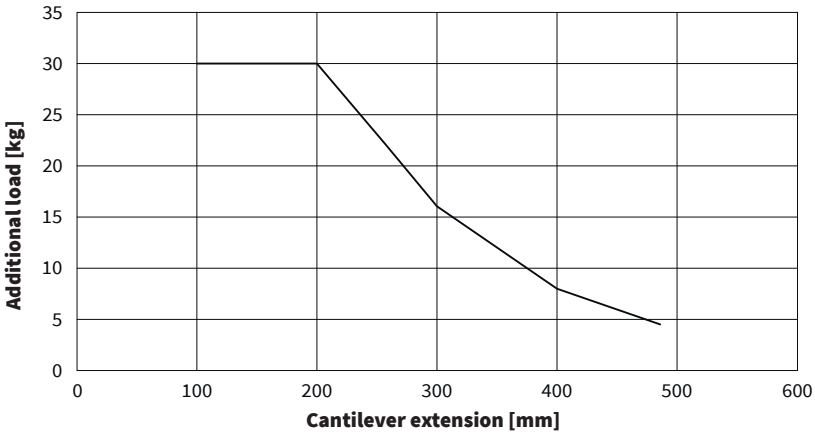

VERTICAL DEFLECTION

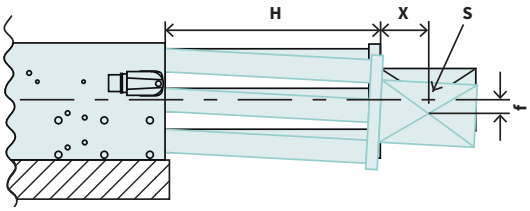

H = Stroke + Plate thickness
S = Center of gravity
X = Distance to center of gravity
f = Deflection of theoretical axis

Total deflection =
Static deflection + deflection under load
(Deflection measured at standstill)

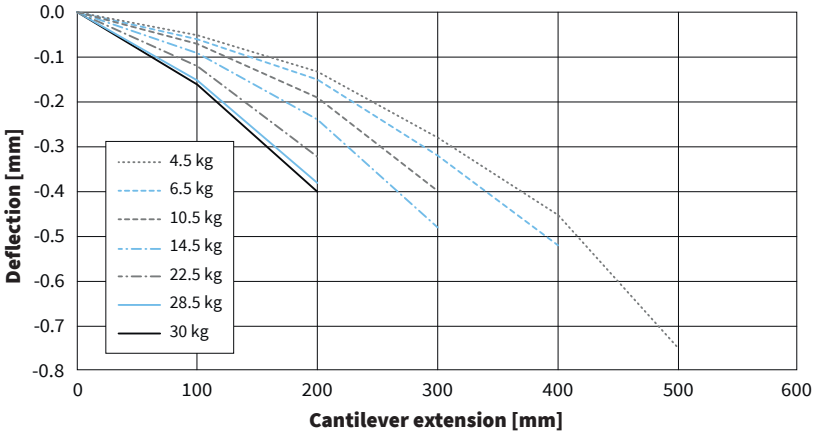

ORDERING INFORMATION

Item	Description	Item-No.
DM01-48x240F-HP-C-95_CS01	Linear Module, Stroke max 95mm	0150-4168
DM01-48x240F-HP-C-95_CS01_BK01	Linear Module with pneumatic holding brake, Stroke max 95mm	0150-4195
DM01-48x240F-HP-C-95_CS01_MS08	Linear Module with MagSpring 120N, Stroke max 95mm	0150-4182
DM01-48x240F-HP-C-95_CS01_MS08_BK01	Linear Module with MagSpring 120N and pneumatic holding brake, Stroke max 95mm	0150-4194
DM01-48x240F-HP-C-185_CS01	Linear Module, Stroke max 185mm	0150-4169
DM01-48x240F-HP-C-185_CS01_BK01	Linear Module with pneumatic holding brake, Stroke max 185mm	0150-4197
DM01-48x240F-HP-C-185_CS01_MS08	Linear Module with MagSpring 120N, Stroke max 185mm	0150-4181
DM01-48x240F-HP-C-185_CS01_MS08_BK01	Linear Module with MagSpring 120N and pneumatic holding brake, Stroke max 185mm	0150-4196
DM01-48x240F-HP-C-305_CS01	Linear Module, Stroke max 305mm	0150-4170
DM01-48x240F-HP-C-305_CS01_BK01	Linear Module with pneumatic holding brake, Stroke max 305mm	0150-4199
DM01-48x240F-HP-C-305_CS01_MS08	Linear Module with MagSpring 120N, Stroke max 305mm	0150-4183
DM01-48x240F-HP-C-305_CS01_MS08_BK01	Linear Module with MagSpring 120N and pneumatic holding brake, Stroke max 305mm	0150-4198
DM01-48x240F-HP-C-395_CS01	Linear Module, Stroke max 395mm	0150-4171
DM01-48x240F-HP-C-485_CS01	Linear Module, Stroke max 485mm	0150-4172

Item	Description	Item-No.
DM01-48x240F-HP-C-95_CS01-2S	Linear Module, Stroke max 95mm - Safety Encoder	0150-24168
DM01-48x240F-HP-C-95_CS01_BK01-2S	Linear Module with pneumatic holding brake, Stroke max 95mm - Safety Encoder	0150-24195
DM01-48x240F-HP-C-95_CS01_MS08-2S	Linear Module with MagSpring 120N, Stroke max 95mm - Safety Encoder	0150-24182
DM01-48x240F-HP-C-95_CS01_MS08_BK01-2S	Linear Module with MagSpring 120N and pneumatic holding brake, Stroke max 95mm - Safety Encoder	0150-24194
DM01-48x240F-HP-C-185_CS01-2S	Linear Module, Stroke max 185mm - Safety Encoder	0150-24169
DM01-48x240F-HP-C-185_CS01_BK01-2S	Linear Module with pneumatic holding brake, Stroke max 185mm - Safety Encoder	0150-24197
DM01-48x240F-HP-C-185_CS01_MS08-2S	Linear Module with MagSpring 120N, Stroke max 185mm - Safety Encoder	0150-24181
DM01-48x240F-HP-C-185_CS01_MS08_BK01-2S	Linear Module with MagSpring 120N and pneumatic holding brake, Stroke max 185mm - Safety Encoder	0150-24196
DM01-48x240F-HP-C-305_CS01-2S	Linear Module, Stroke max 305mm - Safety Encoder	0150-24170
DM01-48x240F-HP-C-305_CS01_BK01-2S	Linear Module with pneumatic holding brake, Stroke max 305mm - Safety Encoder	0150-24199
DM01-48x240F-HP-C-305_CS01_MS08-2S	Linear Module with MagSpring 120N, Stroke max 305mm - Safety Encoder	0150-24183
DM01-48x240F-HP-C-305_CS01_MS08_BK01-2S	Linear Module with MagSpring 120N and pneumatic holding brake, Stroke max 305mm - Safety Encoder	0150-24198
DM01-48x240F-HP-C-395_CS01-2S	Linear Module, Stroke max 395mm - Safety Encoder	0150-24171
DM01-48x240F-HP-C-485_CS01-2S	Linear Module, Stroke max 485mm - Safety Encoder	0150-24172

Item	Description	Item-No.
DM01-48x240F-HP-C-95_CS01_BE03	Linear Module, Stroke max. 95mm - Clean Room	0150-4631
DM01-48x240F-HP-C-185_CS01_BE03	Linear Module, Stroke max. 185mm - Clean Room	0150-4753
DM01-48x240F-HP-C-305_CS01_BE03	Linear Module, Stroke max. 305mm - Clean Room	0150-4754
DM01-48x240F-HP-C-395_CS01_BE03	Linear Module, Stroke max. 395mm - Clean Room	0150-4755
DM01-48x240F-HP-C-485_CS01_BE03	Linear Module, Stroke max. 485mm - Clean Room	0150-4632

LINEAR MODULE DM01-48x360_CS01

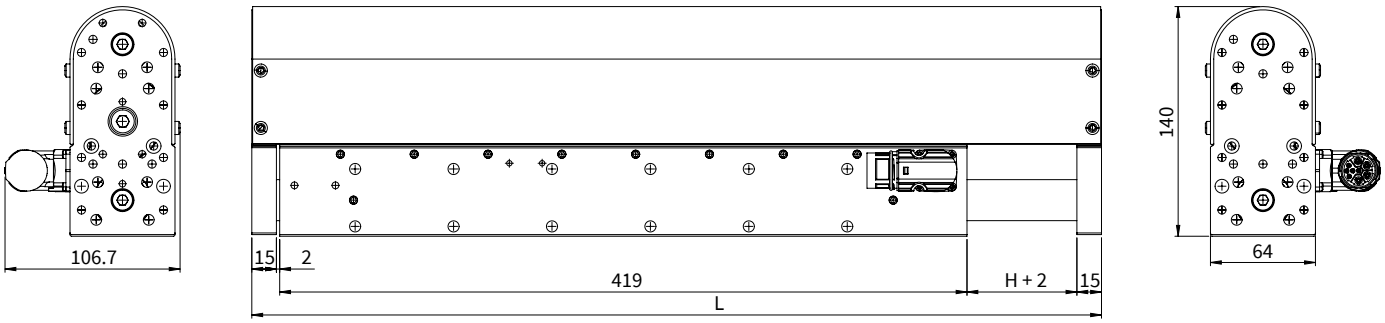

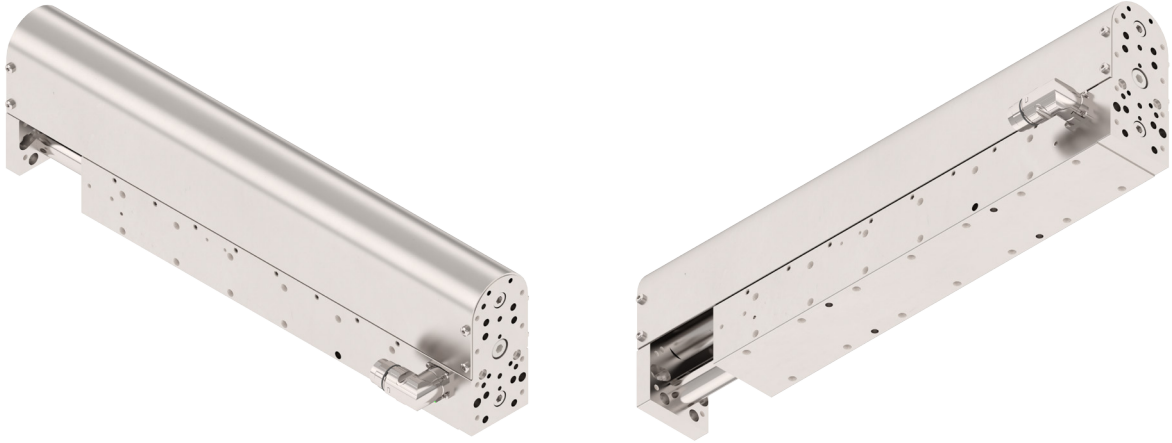

Dimensions in mm

Linear module	Stroke H [mm (inch)]		Carriage length L [mm (inch)]		Moving mass [1] [g (lb)]		Total weight [g (lb)]	
DM01-48x360F-HP-C-65_CS01	65	(2.56)	518	(20.39)	5780	(12.74)	13300	(29.32)
DM01-48x360F-HP-C-185_CS01	185	(7.28)	638	(25.12)	7100	(15.65)	14620	(32.23)
DM01-48x360F-HP-C-275_CS01	275	(10.83)	728	(28.66)	8090	(17.84)	15610	(34.41)
DM01-48x360F-HP-C-365_CS01	365	(14.37)	818	(32.20)	9070	(20.0)	16590	(36.57)

[1] Mass: Slider, Shafts, Front plate, Front plate back

MATERIALS

Guide Block & Front Plate	Guide Shaft	Bearing	Wipers
Anodized Aluminum	Hardened steel, hard chrome-plated, ø 25 mm	Linear ball bearing	H-ECOPUR

LINEAR MODULE DM01-48x360_CS01_BK01 WITH HOLDING BRAKE

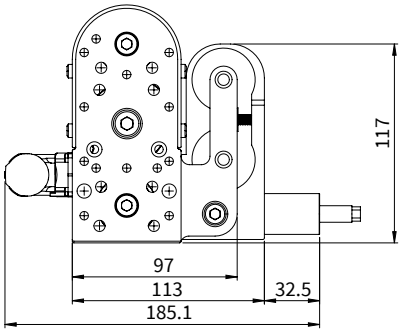

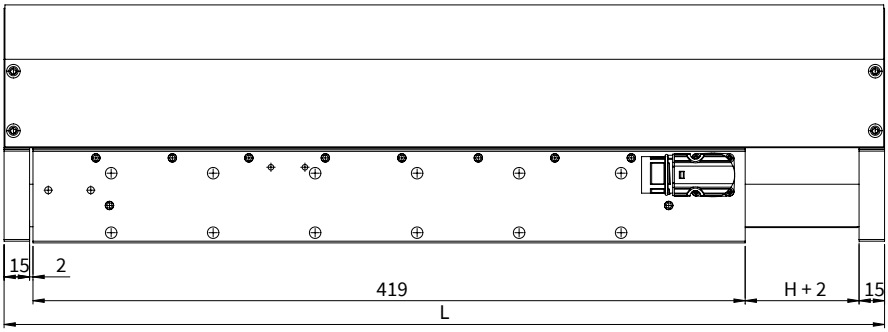

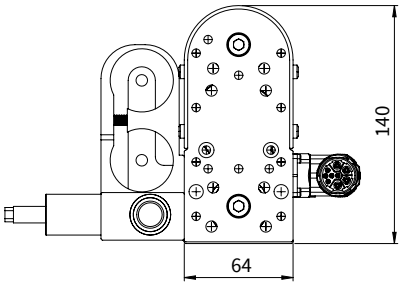

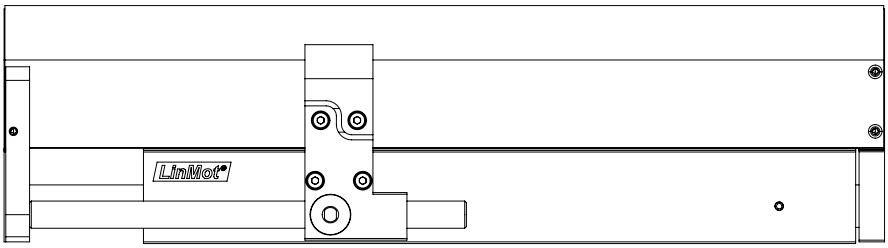

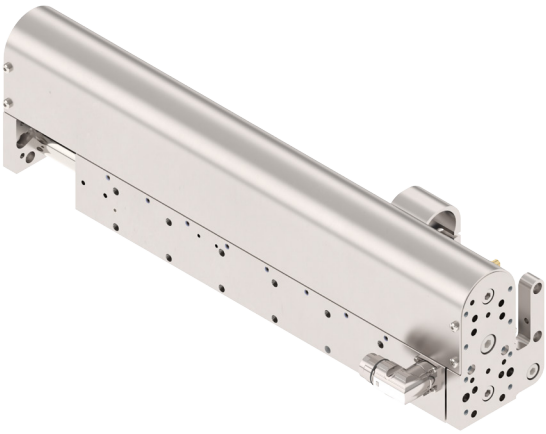

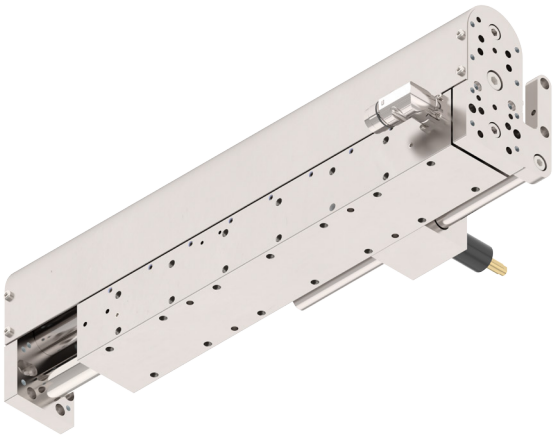

Dimensions mm

Linear module with holding brake	Stroke H [mm (inch)]		Carriage length L [mm (inch)]		Moving mass [1] [g (lb)]		Total weight [g (lb)]	
DM01-48x360F-HP-C-65_CS01_BK01 [2]	65	(2.56)	518	(20.39)	6320	(13.93)	14111	(31.11)
DM01-48x360F-HP-C-185_CS01_BK01 [2]	185	(7.28)	638	(25.12)	8106	(17.87)	15896	(35.04)
DM01-48x360F-HP-C-275_CS01_BK01 [2]	275	(10.83)	728	(28.66)	9450	(20.83)	17240	(38.0)
DM01-48x360F-HP-C-365_CS01_BK01 [2]	365	(14.37)	818	(32.20)	10780	(23.77)	18570	(40.94)

[1] Mass: Slider, Shafts, Front plate, Front plate back, Brake shaft
[2] Pneumatic holding brake with max. holding force 1000 N

MATERIALS

Guide Block & Front Plate	Guide Shaft	Bearing	Wipers
Anodized Aluminum	Hardened steel, hard chrome-plated, ø 25 mm	Linear ball bearing	H-ECOPUR

LINEAR MODULE DM01-48x360_CS01_MS08 WITH VERTICAL LOAD COMPENSATION MAGSPRING®

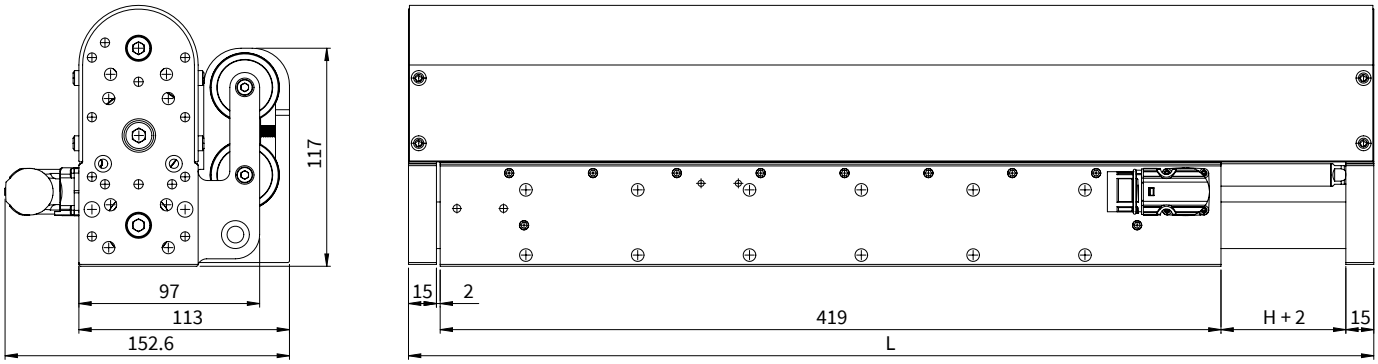

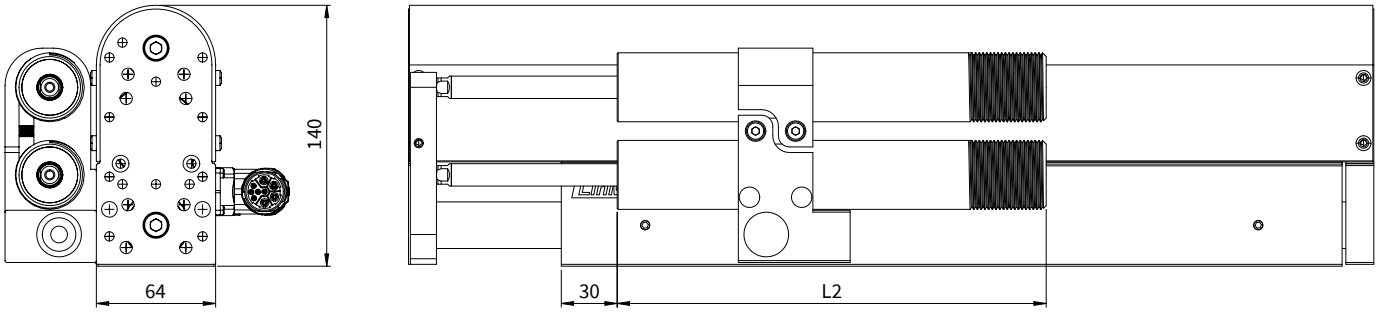

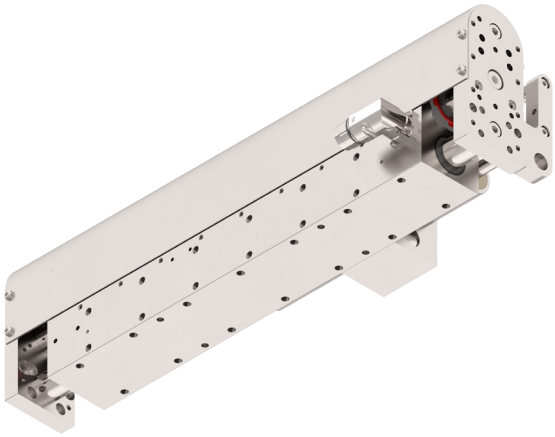

Dimensions mm

Linear module with MagSpring	Stroke H [mm (inch)]		MS Stator length L2 [mm (inch)]		Carriage length L [mm (inch)]		Moving mass [1] [g (lb)]		Total weight [g (lb)]	
DM01-48x360F-HP-C-65_CS01_MS08 [2]	65	(2.56)	230	(9.06)	518	(20.39)	6220	(13.71)	14010	(30.89)
DM01-48x360F-HP-C-185_CS01_MS08 [2]	185	(7.28)	380	(14.96)	638	(25.12)	7660	(16.89)	15450	(34.06)
DM01-48x360F-HP-C-275_CS01_MS08 [2]	275	(10.83)	425	(16.73)	728	(28.66)	8956	(19.74)	16746	(36.92)
DM01-48x360F-HP-C-365_CS01_MS08 [2]	365	(14.37)	500	(19.69)	818	(32.20)	10252	(22.60)	17502	(38.59)

[1] Mass: Slider, Shafts, Front plate, Front plate back, MagSpring slider
[2] MagSpring with constant force 120 N, (Eff. load compensation depending on moving mass)

MATERIALS

Guide Block & Front Plate	Guide Shaft	Bearing	Wipers
Anodized Aluminum	Hardened steel, hard chrome-plated, ø 25 mm	Linear ball bearing	H-ECOPUR

LINEAR MODULE DM01-48x360_CS01_MS08_BK01 WITH VERTICAL LOAD COMPENSATION AND HOLDING BRAKE

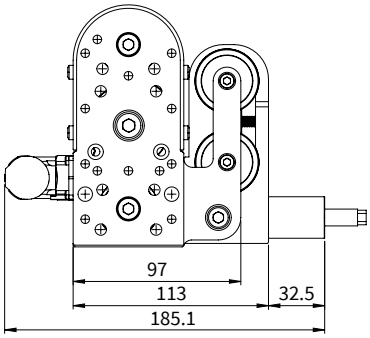

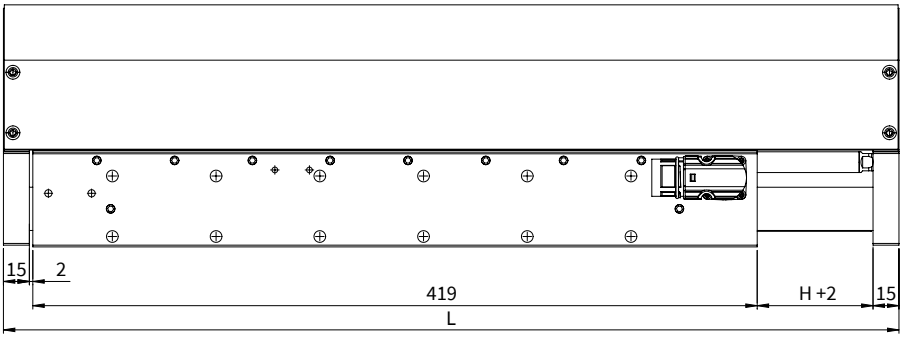

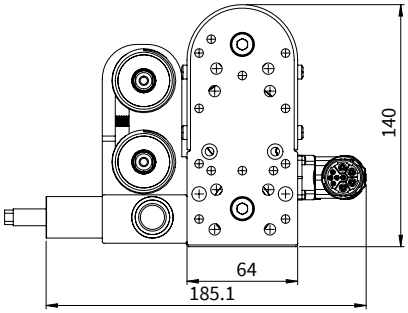

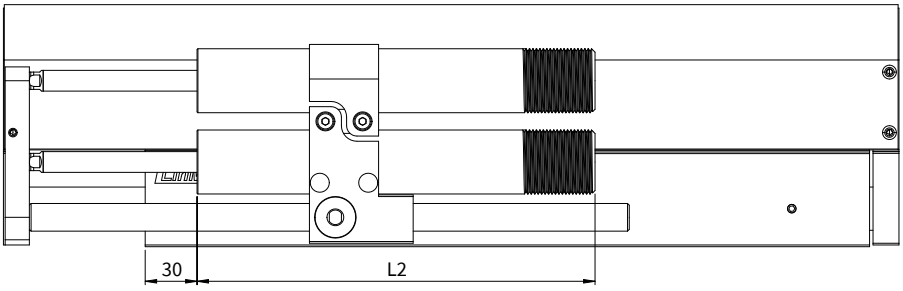

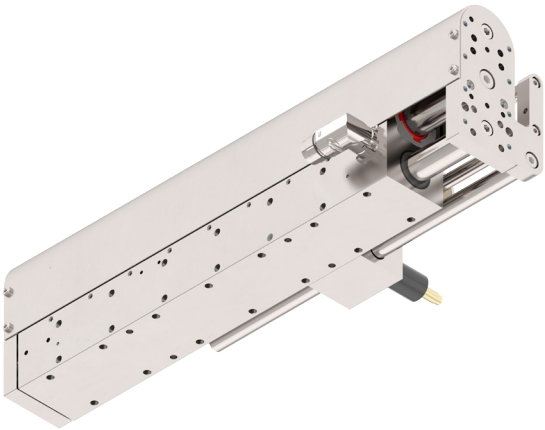

Dimensions mm

Linear module with MagSpring + holding brake	Stroke H [mm (inch)]		MS Stator length L2 [mm (inch)]		Carriage length L [mm (inch)]		Moving mass [1] [g (lb)]		Total weight [g (lb)]	
DM01-48x360F-HP-C-95_CS01_MS08_BK01 [2]	65	(2.56)	230	(9.06)	518	(20.39)	6760	(14.90)	14550	(32.08)
DM01-48x360F-HP-C-185_CS01_MS08_BK01 [2]	185	(7.28)	380	(14.96)	638	(25.12)	8666	(19.11)	16456	(36.28)
DM01-48x360F-HP-C-275_CS01_MS08_BK01 [2]	275	(10.83)	425	(16.73)	728	(28.66)	10316	(22.74)	18106	(39.92)
DM01-48x360F-HP-C-365_CS01_MS08_BK01 [2]	365	(14.37)	500	(19.69)	818	(32.20)	11962	(26.37)	19752	(43.55)

[1] Mass: Slider, Shafts, Front plate, Front plate back, Brake shaft, MagSpring slider
[2] MagSpring with constant force 120 N (Eff. load compensation depending on moving mass), Pneumatic holding brake with max. holding force 1000 N

MATERIALS

Guide Block & Front Plate	Guide Shaft	Bearing	Wipers
Anodized Aluminum	Hardened steel, hard chrome-plated, ø 25 mm	Linear ball bearing	H-ECOPUR

PERFORMANCE DATA DM01-48x360

Performance Data Linear Module DM01-48x360				
Stroke				
Max. Stroke	mm	(in)	365	(14.37)
Force				
Max. Force @ 48VDC	N	(lbf)	572	(129)
Max. Force @ 72VDC	N	(lbf)	572	(129)
Max. Cont. Force [Passive cooling/ Fan / Fluid]	N	(lbf)	170 / 233 / -	(38 / 53.3 / -)
Force Constant	N/A_{pk}	(lbf/A_{pk})	22	(4.95)
Position Detection				
Position Resolution	mm	(in)	0.007	(0.0003)
Repeatability	mm	(in)	±0.05	(±0.002)
Position Resolution with ES	mm	(in)	-	(-)
Repeatability with ES	mm	(in)	-	(-)
Electrical Data				
Max. Current @ 48VDC	A_{pk}		25.9	
Max. Current @ 72VDC	A_{pk}		25.9	
Max. Cont. Current [Passive cooling /Fan / Fluid]	A_{pk}		7.7 / 10.6 / -	
Terminal Resistance 25 °C / 120 °C	Ohm		0.97 / 1.4	
Terminal Inductivity	mH		1.1	
Magnetic Period	mm	(in)	60	(2.35)
Thermal Data				
Max. Winding Temperature (Sensor)	°C		120	
Thermal Resistance [Passive cooling / Fan / Fluid]	K/W		0.94 / 0.5 / -	
Thermal Time Constant [Passive cooling / Fan / Fluid]	s		800 / 270 / -	
Mechanical Data				
Stator Diameter	mm	(in)	48	(1.9)
Slider Diameter	mm	(in)	28	(1.1)
IP Code			IP 64 S	
Certification				
cURus	File-No.		E354430	

13

CONNECTOR

Motor Connector Wiring	C-Stecker	Wire Color Motor Cable
Ph 1+	A	red
Ph 1-	B	pink
Ph 2+	C	blue
Ph 2-	D	grey
+5VDC	E	white
GND	F	inner Shield
Sinus	G	yellow
Cosinus	H	green
Temp.	L	black
Shield	Case	outer Shield

C-Connector

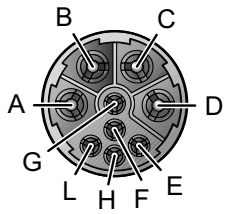

View: Motor connector, plug side
Material: nickel plated
IP Code: IP 67

MAXIMUM LOAD

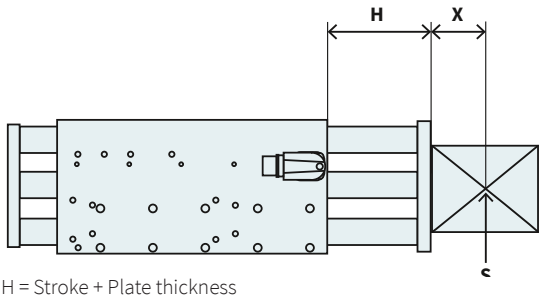

H = Stroke + Plate thickness
X = Distance to center of gravity
S = Center of gravity
Cantilever extension = H + X

The maximum load depends on the cantilever extension (distance H plus distance between the center of gravity of the working load and the mounting surface).

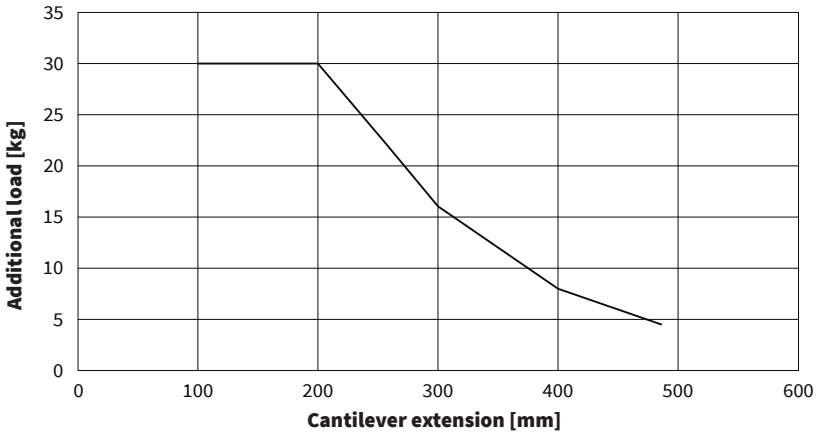

VERTICAL DEFLECTION

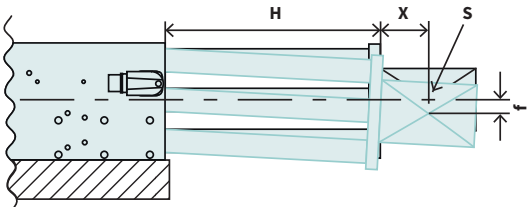

H = Stroke + Plate thickness
S = Center of gravity
X = Distance to center of gravity
f = Deflection of theoretical axis

Total deflection =
Static deflection + deflection under load
(Deflection measured at standstill)

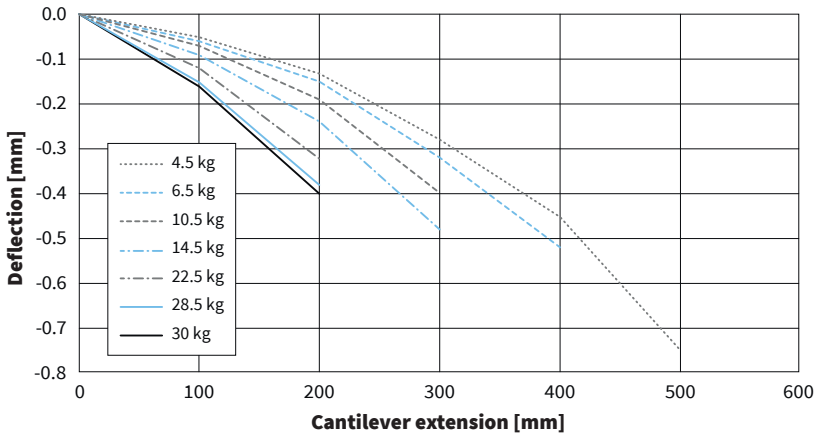

ORDERING INFORMATION

Item	Description	Item-No.
DM01-48x360F-HP-C-65_CS01	Linear Module, Stroke max. 65mm	0150-6967
DM01-48x360F-HP-C-65_CS01_BK01	Linear Module with pneumatic holding brake, Stroke max. 65mm	0150-6990
DM01-48x360F-HP-C-65_CS01_MS08	Linear Module with MagSpring 120N, Stroke max. 65mm	0150-6987
DM01-48x360F-HP-C-65_CS01_MS08_BK01	Linear Module with MagSpring 120N and pneumatic holding brake, Stroke max. 65mm	0150-6992
DM01-48x360F-HP-C-185_CS01	Linear Module, Stroke max. 185mm	0150-6983
DM01-48x360F-HP-C-185_CS01_BK01	Linear Module with pneumatic holding brake, Stroke max. 185mm	0150-6991
DM01-48x360F-HP-C-185_CS01_MS08	Linear Module with MagSpring 120N, Stroke max. 185mm	0150-6988
DM01-48x360F-HP-C-185_CS01_MS08_BK01	Linear Module with MagSpring 120N and pneumatic holding brake, Stroke max. 185mm	0150-6993
DM01-48x360F-HP-C-275_CS01	Linear Module, Stroke max. 275mm	0150-6985
DM01-48x360F-HP-C-275_CS01_BK01	Linear Module with pneumatic holding brake, Stroke max. 275mm	0150-7372
DM01-48x360F-HP-C-275_CS01_MS08	Linear Module with MagSpring 120N, Stroke max. 275mm	0150-6989
DM01-48x360F-HP-C-275_CS01_MS08_BK01	Linear Module with MagSpring 120N and pneumatic holding brake, Stroke max. 275mm	0150-6994
DM01-48x360F-HP-C-365_CS01	Linear Module, Stroke max. 365mm	0150-6986
DM01-48x360F-HP-C-365_CS01_BK01	Linear Module with MagSpring 120N and pneumatic holding brake, Stroke max. 365mm	0150-7373
DM01-48x360F-HP-C-365_CS01_MS08	Linear Module with MagSpring 120N, Stroke max. 365mm	0150-7368
DM01-48x360F-HP-C-365_CS01_MS08_BK01	Linear Module with MagSpring 120N and pneumatic holding brake, Stroke max. 365mm	0150-6995

Item	Description	Item-No.
DM01-48x360F-HP-C-65_CS01_BE03	Linear Module, Stroke max. 65mm - Clean Room	0150-6998
DM01-48x360F-HP-C-185_CS01_BE03	Linear Module, Stroke max. 185mm - Clean Room	0150-6999
DM01-48x360F-HP-C-275_CS01_BE03	Linear Module, Stroke max. 275mm - Clean Room	0150-7000
DM01-48x360F-HP-C-365_CS01_BE03	Linear Module, Stroke max. 365mm - Clean Room	0150-7001

FORCE SENSOR MODULES

The force sensor modules of the DM01-37-FSxx and DM01-48-FSxx series can be flanged directly to the linear modules of the DM01 series and thus enable the measurement of the forces occurring in the direction of movement of the modules. Together with the C1250 drives, which can also be calibrated, it is thus possible to either execute a process in a force-controlled manner or to implement process monitoring based on the forces that occur.

Item	Description	Item-No.
DM01-37-FS22	Force sensor module 250N for DM01-37 with accessories	0150-4797

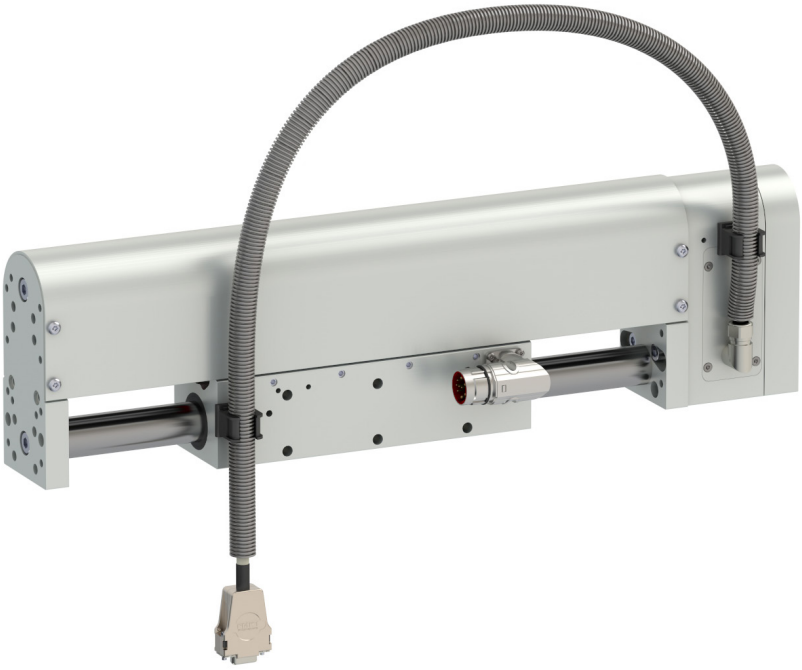

Item	Description	Item-No.
DM01-48-FS25	Force sensor module for DM01-48 with accessories	0150-4799

PILLAR SYSTEM

For the realization of YZ motion units a classic pillar system is available, with which the units can be flexibly adjusted in height if required. The range consists of the components pillar base, pillars and pillar adapter.

PILLAR SYSTEM 25X2 FOR LINEAR MODULE DM01-37

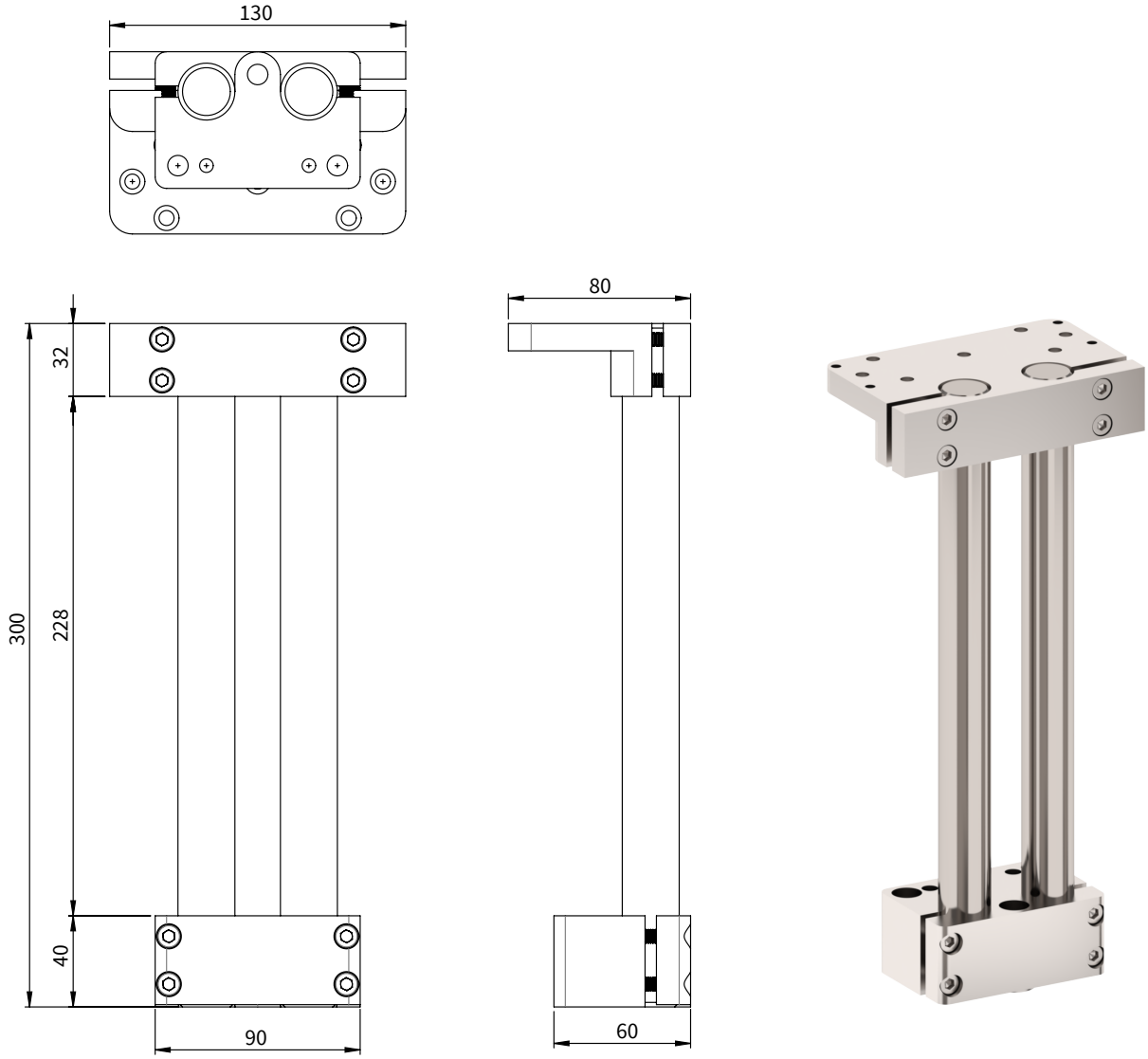

Item	Description	Item-No.
Z01-SB-25x2	Pillar base 25x2	0150-4058
Z01-SL-25x300	Pillar Ø25 Length=300 mm for Pillar System 25x2	0150-4025
Z01-SA-25x2	Pillar adapter 25x2	0150-4059

PILLAR SYSTEM 45X2 FOR LINEAR MODULE DM01-48

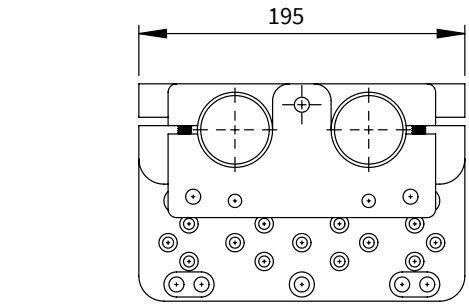

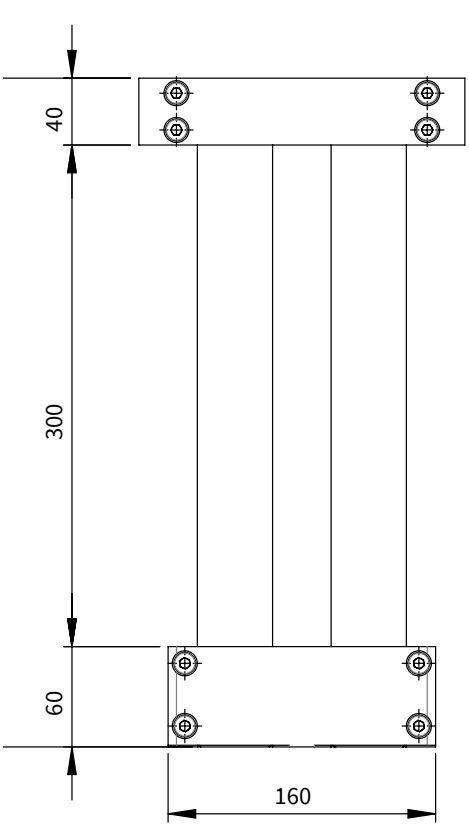

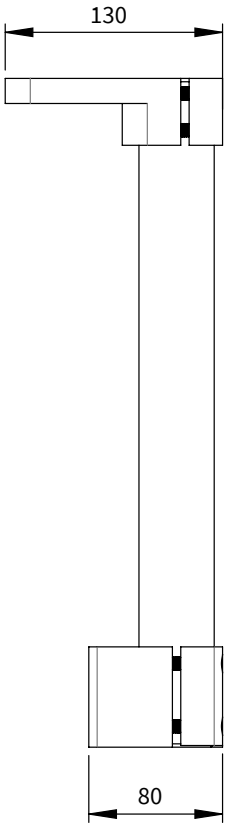

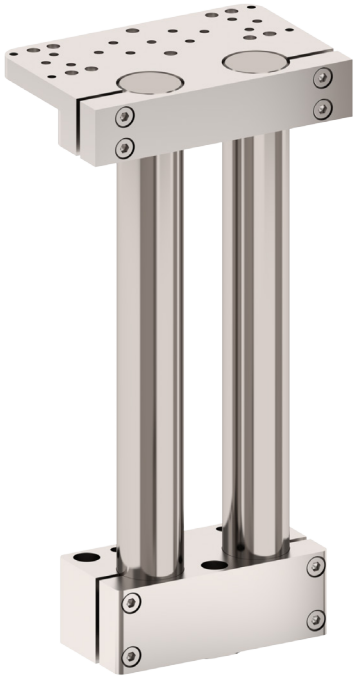

Item	Description	Item-No.
Z01-SB-45x2	Pillar base 45x2	0150-4056
Z01-SL-45x400	Pillar Ø45 Length=400 mm for Pillar System 45x2	0150-4045
Z01-SA-45x2	Pillar adapter 45x2	0150-4057

CABLE CONDUIT KIT ID 23 MM / 1200 MM FOR DM01-23 AND DM01-37

The cable conduit kit includes the fixing material for the cable conduit supplied. The length of the cable conduit is designed for the maximum horizontal stroke of 500 mm and can be shortened accordingly for smaller strokes.

Item	Description	Item-No.
Z01-KS23-1200	Cable conduit kit ID 23 mm / 1200 mm	0150-4376

CABLE CONDUIT KIT ID 29 MM / 1300 MM FOR DM01-48

The cable conduit kit includes the fixing material for the cable conduit supplied. The length of the cable conduit is designed for the maximum horizontal stroke of 600 mm and can be shortened accordingly for smaller strokes.

Item	Description	Item-No.
Z01-KS34-1300	Cable conduit kit ID 29 mm / 1300 mm	0150-4377

FANS

Item	Description	Item-No.
HV01-23	Fan kit 23	0150-5050
HV01-37/48	Fan kit 37/48, suitable for direct mounting on DM01-37 without MagSpring	0150-5051

Note: For DM01-37 linear modules without MagSpring, the threaded holes (P1-P4, see installation guide) can be used to mount the fan HV01-37/48 (Item-No. 0150-5051). Fans cannot be mounted directly on all other DM01 linear modules. It is recommended that the customer design his own adapters for external mounting.

ALL LINEAR MOTION
FROM A SINGLE SOURCE

Europe / Asia Headquarters

NTI AG - LinMot & MagSpring
Bodenaeckerstrasse 2
CH-8957 Spreitenbach
Switzerland

+41 (0)56 419 91 91
+41 (0)56 419 91 92

office@linmot.com
www.linmot.com

North / South America Headquarters

LinMot USA, Inc.
N1922 State Road 120, Unit 1
Lake Geneva, WI 53147
United States

262-743-2555

usasales@linmot.com
www.linmot-usa.com