Installation Guide
Linear Rotary Motors

ENG

PR02-38

Content

General Information **4**
1.1 Introduction 4
1.2 Explanation of Symbols 4
1.3 Qualified Personnel 4
1.4 Liability 4
1.5 Copyright 4
2 Safety Instructions **5**
3 Intended Use **7**
3.1 Designation Code PR02 Linear Rotary Motors 7
3.2 PR02-38 Linear Rotary Motor 7
3.3 Internal Mechanical Stops 8
3.4 Max. Speed 8
3.5 Option Load Compensation MagSpring® 8
3.6 Option Hollow Shaft 8
3.7 Option Torque Sensor 8
3.8 Option Force Sensor 9
3.9 Option angled Motor Connector (R01) 10
4 Installation Instructions **10**
4.1 Operating Conditions 10
4.2 Installation Options 10
4.2.1 Horizontal Installation 10
4.2.2 Vertical Installation 11
4.3 Mounting the Load on the Shaft 11
4.3.1 Feather Key 11
4.3.2 Shaft-Hub Clamping 12
4.4 Material Data 12
5 Connections **13**
5.1 Electrical Connection 13
5.1.1 Motor Cable 13
5.1.2 Wiring Linear Rotary Motor 14
5.1.3 Overview of the Connectors 15
5.1.4 Connector Wiring Linear Rotary Motor 15
5.1.5 Connector Wiring Torque Measuring Shaft 16
5.1.6 Connector Wiring Force Sensor 17
5.2 Connection of Air 18
6 Start-up **19**
6.1 Linear Motor and Rotary Motor 19
6.2 Default Values of the Coordinate System 19
6.2.1 Angle of Rotation 19
6.2.2 Position 19
6.3 Torque Measuring Shaft 20
6.3.1 Torque Operating Direction 20

6.4 Force Sensor ... 20
6.4.1 Force Operating Direction ... 20
6.5 Magnetic Spring MagSpring® ... 21
6.5.1 Force Direction ... 21
6.6 Plug and Play Function for Linear Rotary Motors ... 21
6.7 Setting Motor Parameters ... 21
6.7.1 Selection of the Motor Data Files ... 21
6.7.2 Application-specific Parameters ... 22
6.7.3 Inverting the Coordinate System ... 22
6.7.4 Selection of the Linear and Rotary Unit System ... 24
6.7.5 Referencing the Linear Motor ... 24
6.7.6 Referencing the Rotary Motor ... 25
6.8 Initial Setup of Torque Measuring Shaft and Force Sensor ... 25
6.8.1 Software Package „Technology Function Force Control“ ... 25
6.8.2 Setting Parameters for Torque / Force Control ... 25
6.8.3 Initial Test of a Torque Measuring Shaft / Force Sensor ... 27
7 Accessories ... 29
7.1 Overview ... 29
7.2 Motor Cable ... 30
7.3 Sensor Cable ... 31
7.4 Shaft-Hub Clamping ... 31
7.4.1 Dimensions and Technical Data ... 32
7.4.2 Mounting ... 32
8 Maintenance and Test Instructions ... 33
8.1 Maintenance ... 33
8.1.1 Preventive Inspection every 6'000h ... 33
8.1.2 Needs-based maintenance ... 33
8.1.3 Lubrication Specification ... 34
8.2 Stator Checking ... 34
8.2.1 Linear Motor PS01-23x80F-HP-R ... 34
8.2.2 Rotary Motor Stator RS01-38x51 ... 34
8.3 Calibration of Torque Measuring Shaft and Force Sensor ... 35
9 Transport and Storage ... 35
10 Dimensions ... 36
10.1 Linear Rotary Motor PR02-38x51-R_23x80F-HP-R-70-L_MS0x_TS0x_FS0x ... 36
10.2 Connection of the Motor Cable ... 37
11 International Certificates ... 38
11.1 EU Declaration of Conformity CE-Marking ... 39
11.2 UK Declaration of Conformity UKCA-Marking ... 40
11.3 CB Test Certificate ... 41
11.4 UL Certificate ... 42

General Information

1.1 Introduction

This manual includes instructions for the assembly, installation, maintenance, transport, and storage of linear rotary motors. The document is intended for electricians, mechanics, service technicians, and warehouse staff.
Read this manual before using the product and observe the general safety instructions and those in the relevant section at all times.
Keep these operating instructions in an accessible place and make them available to the personnel assigned.

1.2 Explanation of Symbols

Triangular warning signs warn of danger.

Round command symbols tell what to do.

1.3 Qualified Personnel

All work such as installation, commissioning, operation and service of the product may only be carried out by qualified personnel.
The personnel must have the necessary qualifications for the corresponding activity and be familiar with the installation, commissioning, operation and service of the product. The manual and in particular the safety instructions must be carefully read, understood and observed.

1.4 Liability

NTI AG (as manufacturer of LinMot and MagSpring products) excludes all liability for damages and expenses caused by incorrect use of the products. This also applies to false applications, which are caused by NTI AG's own data and notes, for example in the course of sales, support or application activities. It is the responsibility of the user to check the data and information provided by NTI AG for correct applicability in terms of safety. In addition, the entire responsibility for safety-related product functionality lies exclusively with the user.Product warranties are void if products are used with stators, sliders, servo drives or cables not manufactured by NTI AG unless such use was specifically approved by NTI AG.
NTI AG’s warranty is limited to repair or replacement as stated in our standard warranty policy as described in our "terms and conditions" previously supplied to the purchaser of our equipment (please request copy of same if not otherwise available). Further reference is made to our general terms and conditions.

1.5 Copyright

This work is protected by copyright.
Under the copyright laws, this publication may not be reproduced or transmitted in any form, electronic or mechanical, including photocopying, recording, microfilm, storing in an information retrieval system, not even for training purposes, or translating, in whole or in part, without the prior written consent of NTI AG.
LinMot® is a registered trademark of NTI AG.

2 Safety Instructions

Pacemaker / Implanted Heart Defibrillator
Sliders could affect the functioning of pacemakers and implanted heart defibrillators. For the duration of a strong approach to a magnetic field, these devices switch into test mode and will not function properly.

- If you wear one of those devices keep a minimum distance of 300 mm (12") between the pacemaker / defibrillator and the housing of the linear rotary motor.
- Inform others who wear these devices to comply with this minimum distance!

Caution - Risk of Electric Shock !
Before working, make sure that there are no high voltages.

Fast-moving Machine Parts
The sliders of LinMot linear motors are fast-moving machine parts. All necessary precautions must be taken to prevent persons approaching the moving elements during operation (provide covers, guards, etc.).

Automatic Restart
The motors can start automatically under certain cricumstances!
If necessary, a corresponding warning symbol must be provided and protection against entering the hazardous area or a suitable safe electronic disconnection must be provided!

Risk of Injury due to a Defect or Fault
For areas where a defect or fault can result in substantial property damage or even serious personal injury, additional external precautions must be taken or devices must be installed to ensure safe operation even if a defect or fault occurs (eg. suitable safe electronic disconnection, mechanical interlocks, barriers, etc.).

Magnetic Field
Magnets integrated in the sliders produce a strong magnetic field. They could damage TVs, laptops, computer hard drives, credit and ATM cards, data storage media, mechanical watches, hearing aids, and speakers.

- Keep magnets away from devices and objects that could be damaged by strong magnetic fields.
- For the above mentioned objects, keep a minimum distance as described in the "Pacemaker / implanted defibrillator" section.
- For non-anti-magnetic watches, keep the double minimum distance.

Burn Hazard
The shaft of LinMot linear rotary motors can reach temperatures of 80 °C, which may cause burns upon contact.

Grounding
All metal parts that are exposed to contact during any user operation or servicing and likely to become energized shall be reliably connected to the means for grounding.

Effects on People
According to the current level of knowledge, magnetic fields of permanent magnets do not have a measurable positive or negative effect on people. It is unlikely that permanent magnets constitute a health risk, but it cannot be ruled out entirely.

- For your own safety, avoid constant contact with magnets.
- Store large magnets at least one meter away from your body.

Temperature Resistance
Keep motors away from unshielded flame or heat.
Temperature above 120°C will cause demagnetization.

3 Intended Use

3.1 Designation Code PR02 Linear Rotary Motors

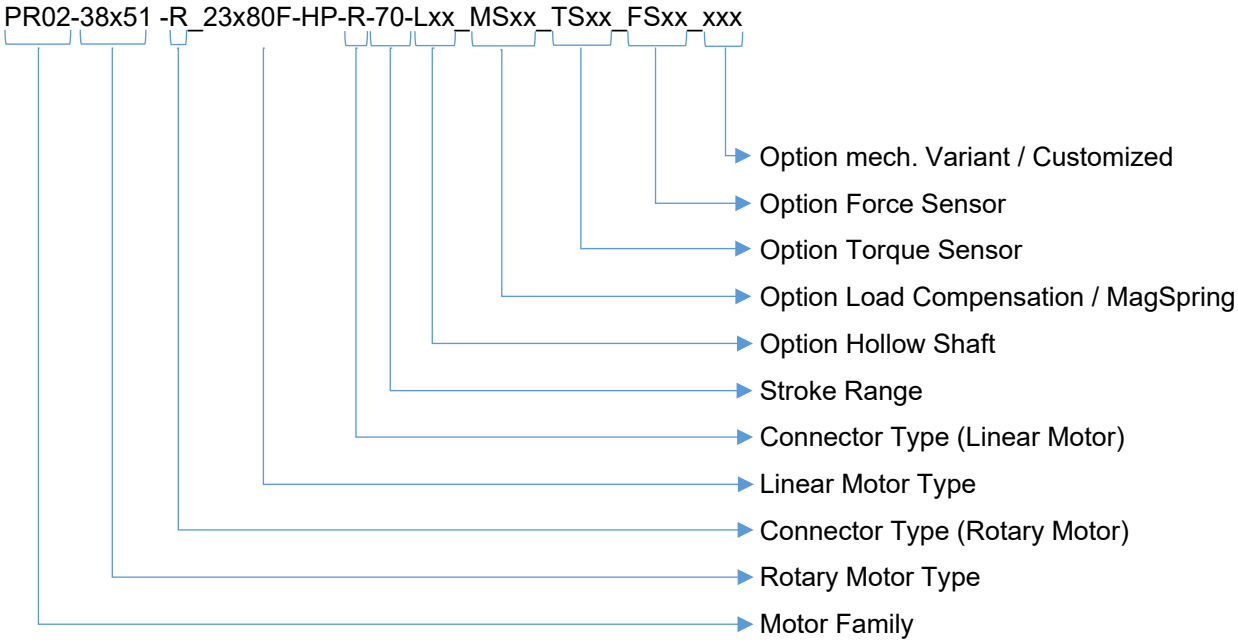

3.2 PR02-38 Linear Rotary Motor

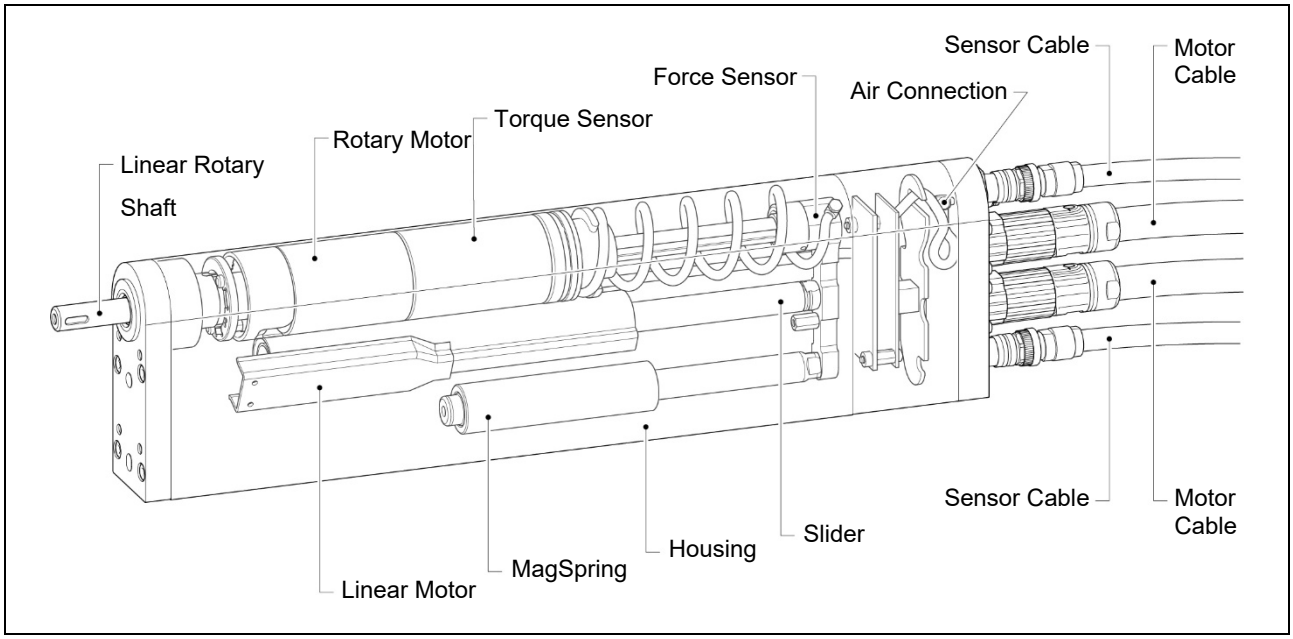

LinMot linear rotary motors are direct electric drives for use in industrial and commercial installations. For correct handling, observe the warnings listed in chap. 2.

The PR02 motor series is characterized by a slim design in which a linear and a rotary motor including additional components are integrated in a common housing.
This features a high-precision and complex mechanical system. The optimization of the internal moving load mass, as well as the moment of inertia, enables a dynamic movement of linear and rotating motion.

The PR02 linear rotary motor is designed for the simultaneous execution of linear and rotating movements. This means that the rotary and linear movements can be executed simultaneously and completely independently of each other. However, if the application permits, it is recommended to execute the rotary movement with the linear rotary shaft retracted, if possible. The rotary and linear movements should also be

carried out one after the other. This reduces the bearing loads and achieves a longer service life of the linear rotary shaft.

By combining linear and rotary motion, highly complex motion patterns, such as those required in sealing and assembly applications, can be easily realized using LinMot linear rotary motors. In addition to the two motors, further options such as an air feed-through, a magnetic spring "MagSpring", a torque sensor and a force sensor can be integrated in the housing.

3.3 Internal Mechanical Stops

Do not drive into the internal mechanical stops!
It must be ensured that the linear motor does not move to the lower or upper internal stop during operation, as otherwise the linear motor may be damaged! The internal stops may only be used for homing purposes. The homing speed must not exceed the value of 0.01 m/s.

3.4 Max. Speed

The mechanically maximum permissible speed of 1500 rpm must not be exceeded.

3.5 Option Load Compensation MagSpring®

The MagSpring option is a passive load compensation based on a magnetic spring with constant force over the functional stroke range that can be integrated into the module. MagSprings are available in various force levels and can either push or pull the linear rotary shaft. The MagSpring option can be used to compensate the load mass. With the correct design, the motor current and thus its power loss can be reduced, by using a MagSpring. This makes higher cycle rates possible.
If the MagSpring is sized properly, it can move the linear rotary shaft including the load mass into a collision-free zone in the event of current loss.

- Close to the stroke limit (idle state), the MagSpring has a reduced force to protect the linear rotary motor from mechanical shocks in case of malfunction/control (self-acceleration into mechanical stop).
- If the maximum defined stroke (see data sheet) is exceeded, the MagSpring function can no longer be guaranteed.
- The function of the MagSpring is affected by mechanical influences such as static and sliding friction. Depending on the operating conditions, it is not possible to guarantee complete retraction/extension of the linear rotary shaft, which is stimulated by the MagSpring and therefore passive.

3.6 Option Hollow Shaft

Linear rotary motors can optionally be equipped with a pneumatic connection. This allows pneumatic compressed air or vacuum to be fed directly through the linear rotary shaft. This avoids the complex passage of hoses around the linear rotary shaft. This option can be used, for example, to control pneumatic grippers or to pick up parts with the help of vacuum. For more information, see chapter 4.4 Connecting the air.

- In the case of a vacuum application, it is recommended to use a unit with sufficient power, as any air coupling points are known to produce minor losses.
- Hollow shafts are not intended for the passage of liquid media.

3.7 Option Torque Sensor

The optional, integrated torque sensor enables closed-loop torque control with target torque specification. The measurement signal is also available to the user for the cyclical recording / evaluation of sensitive process data (e.g. tightening torque). This makes it easy to implement high-precision, reproducible and recordable closing & assembly processes in accordance with Industry 4.0 requirements.

Torque sensors are based on the measuring principle of strain gauges and transmit the measuring signal and the supply voltage without contact. This enables low-wear and maintenance-free continuous operation. With this option, a suitable, galvanically isolated measuring amplifier is automatically integrated in the linear rotary motor and provides a measuring signal of +-10 VDC suitable for the LinMot drive.

Factory calibrations of integrated torque sensors are always carried out in the installed state. This has the advantage that the influences of the mechanics and the linear rotary motor are included.

- The torque measuring shaft is used to measure static as well as dynamic torques. The sensor can measure both right-hand and left-hand loads. The measured variable is suitable for control, regulation and monitoring tasks.
- Torque peaks exceeding the permissible overload (see specifications in the PR02 data sheet) can lead to destruction of the torque measuring shaft. Where such peaks cannot be safely excluded, they must be mitigated.
- When changing between right and left load, the torque sensor may show a small hysteresis. This may cause the sensor to exceed the specified accuracy at the changeover point.
- Simultaneously turning and measuring the force can falsify the measurement (e.g. due to increased friction of the linear rotary shaft).
- The operating temperature range of the sensors is 5 - 45 °C. Above or below the limits, there is a measurement error which influences the measurement results. It is recommended to set the offset to zero before each measurement.
- The max. operating range is between 0 - 80 °C.
- For continuously precise measuring results, it is recommended to calibrate the torque measuring shaft annually according to section 8.3.
- Recalibration is also strongly recommended after improper handling of the force sensors (e.g. impacts on the linear rotary shaft or large overloads).

3.8 Option Force Sensor

The optional force sensor enables closed-loop force control with target force specification. The measurement signal is also available to the user for the cyclical recording / evaluation of sensitive process data (e.g. bounce force). This makes it easy to implement highly accurate, reproducible and recordable pressing & assembly processes in accordance with Industry 4.0 requirements with high precision.
Force sensors are based on the measuring principle of strain gauges. They are designed to withstand multiple mechanical overloads and still precisely detect the smallest forces. With this option, a suitable, galvanically isolated measuring amplifier is automatically integrated in the linear rotary motor and provides a measuring signal of +-10 VDC suitable for the LinMot drive.
Factory calibrations of integrated force sensors are always carried out in the installed state. This has the advantage that the influences of the mechanics and the linear rotary motor are included.

- The force sensor is used to measure compressive and tensile forces. The measured variable is suitable for control, regulation and monitoring tasks.
- Force peaks exceeding the permissible overload (see information in the PR02 data sheet) can lead to destruction of the force sensor. Where such peaks cannot be safely excluded, they must be mitigated.
- When changing between increasing and decreasing forces, the force sensor may show a small hysteresis. This can lead to the sensor exceeding the specified accuracy at the change point.
- Due to the static friction in the system, the force sensor measures more accurately if the force vector always points in the same direction during repeated measurement (influence of force hysteresis).
- To increase the measuring accuracy, linear rotary motors with integrated force sensor technology are supplied without sealing lips / wipers.
- Simultaneous rotation and measurement of the force can falsify the measurement (e.g. due to increased friction of the linear rotary shaft).
- The operating temperature range of the sensors is 5 - 45 °C. Above or below the limits, there is a measurement error which influences the measurement results. It is recommended to set the offset to zero before each measuring process.
- The max. operating range is between 0 - 80 °C.
- For continuously precise measurement results, it is recommended to calibrate the force sensor annually according to section 8.3.
- Recalibration is also strongly recommended after improper handling of the force sensors (e.g. impacts on the stroke rotating shaft or large overload).

3.9 Option angled Motor Connector (R01)

In order to offer the user an even shorter installation length, linear rotary motors of the PR02-38 family are optionally available with a motor angle connector. Since this option is only a mechanical variant, the function of the motor remains the same.

- Further information can be found in the drawings in chapter 10.
- PR02-38 linear rotary motors with the angled motor connector are only available on request.

4 Installation Instructions

4.1 Operating Conditions

Maximum ambient temperature limits:
- -10 °C…80 °C

Internal temperature sensor error occurs at:
- 90 °C

Max. installation altitude
- The max. installation altitude is 4000 m above sea level.
  From 1000m, a derating of 0.5% per 100m must be taken into account for the nominal force or the nominal torque with air cooling.

4.2 Installation Options

The PR02 linear motors have a centric fit (technical data in the chapter "Dimensions") on the front so that an exact alignment of the rotary axis is possible.
Mounting only via the front screws is generally not sufficient (vibrations, transverse load) and must be supplemented by another support. For reasons of vibration, a support as far back as possible is preferable. See the installation examples in the following chapter. To ensure that the motor is not installed in the machine with tension, tolerance compensation (see next chapter) must be provided. The detailed mounting dimensions can be found in chapter 10 "Dimensions". The corresponding CAD files are available in the LinMot eCatalogue https://shop.linmot.com/

4.2.1 Horizontal Installation

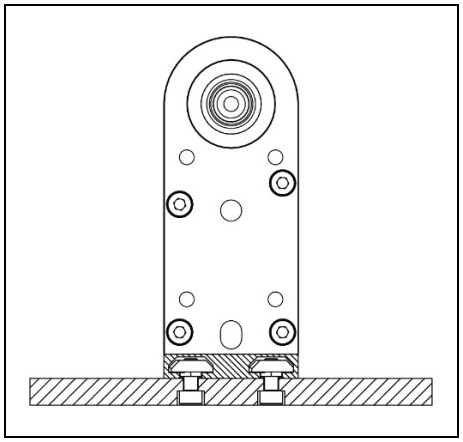

The PR02 linear rotary motor can be mounted horizontally using the T-slots at the bottom.
T-nuts (M4) can be used for fastening.

Ordering Information

Item	Description	Item-No.
Nut N6/M4	Nut for 6 mm T-slots with M4 thread	0150-4383

4.2.2 Vertical Installation

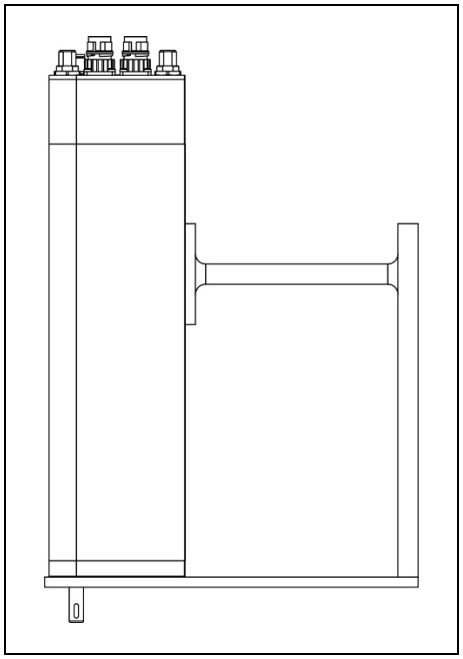

The T-slots on the underside of the PR02 are used for stable vertical mounting (see explanation above). In addition, the front of the motor should be fixed using the 4 tapped holes. The positions of the tapped holes can be found in the "Dimensions" section.

In order to avoid overdetermination of the different motor bearings, the support must have a minimum clearance. This compensates for any tolerances in the linear rotary motor.

4.3 Mounting the Load on the Shaft

The assembly and disassembly of the load mass must not take place in the mechanical end stops of the linear movement. An external support must be used.

4.3.1 Feather Key

The load mass is mounted either by means of a feather key or a shaft-hub clamping.
For the first mounting variant, a feather key slot is incorporated at the end of the shaft.

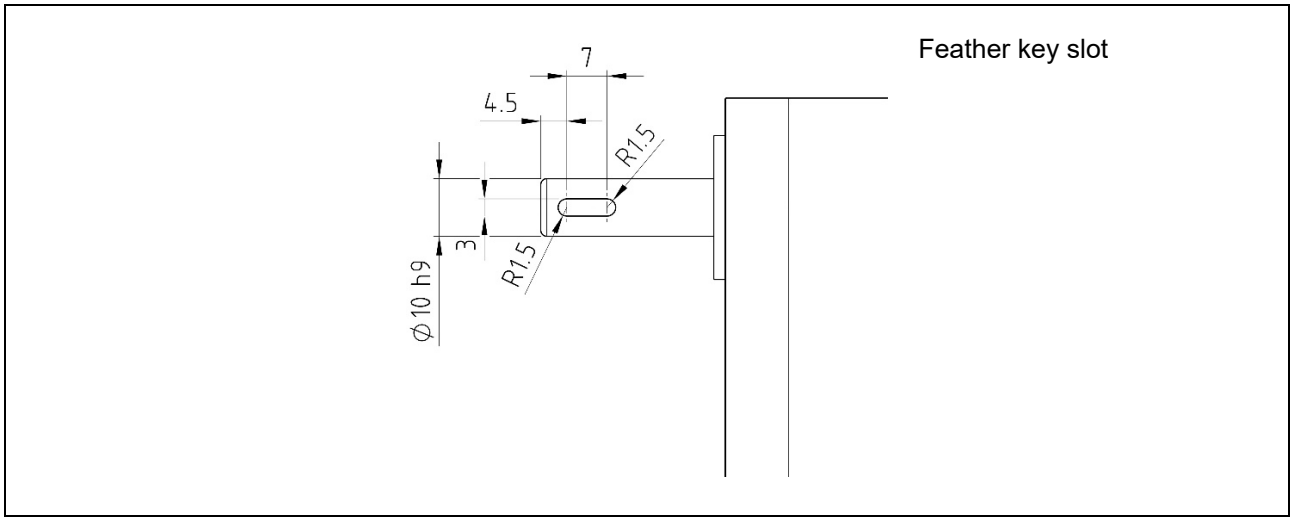

Specification of the Feather Key

Item	Description
Parallel keys deep pattern	face side domed / DIN 6885 A / ISO R773 3x3x10, steel C 45 K, plain

4.3.2 Shaft-Hub Clamping

The shaft-hub clamping is a non-positive connection which is produced by means of two conical rings.
The use of drivers or the production of grooves is completely eliminated. The suitable shaft-hub clamping type can be ordered from LinMot.
Mounting instructions and ordering information can be found in the "Accessories" chapter.

4.4 Material Data

Component	Material
Linear Rotary Shaft	Quenched and tempered steel 1.0601 / C60
Front Flange	Hard anodized aluminium 3.3206
Linear Ball Bearing	Steel
Wiper	NBR
Housing Linear Rotary Motor	Hard anodized aluminium 3.3206

5 Connections

5.1 Electrical Connection

Only connect or disconnect the motor connector and sensor cable if no voltage is applied to the servo drive!
Only original LinMot cables may be used for wiring the motor and sensor! Self-assembled cables must be checked carefully before commissioning!
Incorrect motor wiring can damage the motor and/or the servo drive!

5.1.1 Motor Cable

Three types of cables are available for the linear rotary motors. The standard motor cable is intended for stationary installation. The High-Flex cable (suitable for cable tracks) and the robot cable are used for moving cable applications.

	Wiring Linear Rotary Motor			Wiring torque measuring shaft / force sensor
	Standard cable	High-flex cable	Robot cable	High-flex cable
Cable type	K05-04/05	KS05-04/05	KR05-04/05	KSS02-08
Min. bending radius stationary	25 mm (0.98 in)	30 mm (1.18 in)	40 mm (1.57 in)	35 mm
Min. bending radius moving	Not suitable for applications with moving motor cable	60 mm No torsion	80 mm Max. torsion: ±270° pro 0.5 m	61 mm
Approval	Cable material acc. UL	UL / CSA 300V	UL / CSA 300V	Cable material acc. UL
Material wire insulation	TPE-U	TPE-E	TPE-E	PP
Material cable sheath	PUR	PUR	PUR	PUR
Oil resistance	very good	very good	very good	good
Chemical resistance (to acids, alkalis, solvents, hydraulic fluid)	good	good	good	good moderate for acids
Outdoor durability	very good	very good	very good	good
Flammability	flame retardant	flame retardant	flame retardant	flame retardant

5.1.2 Wiring Linear Rotary Motor

The following diagram shows the connection of the linear rotary motor and the options torque measuring shaft and force sensor with the LinMot drive.

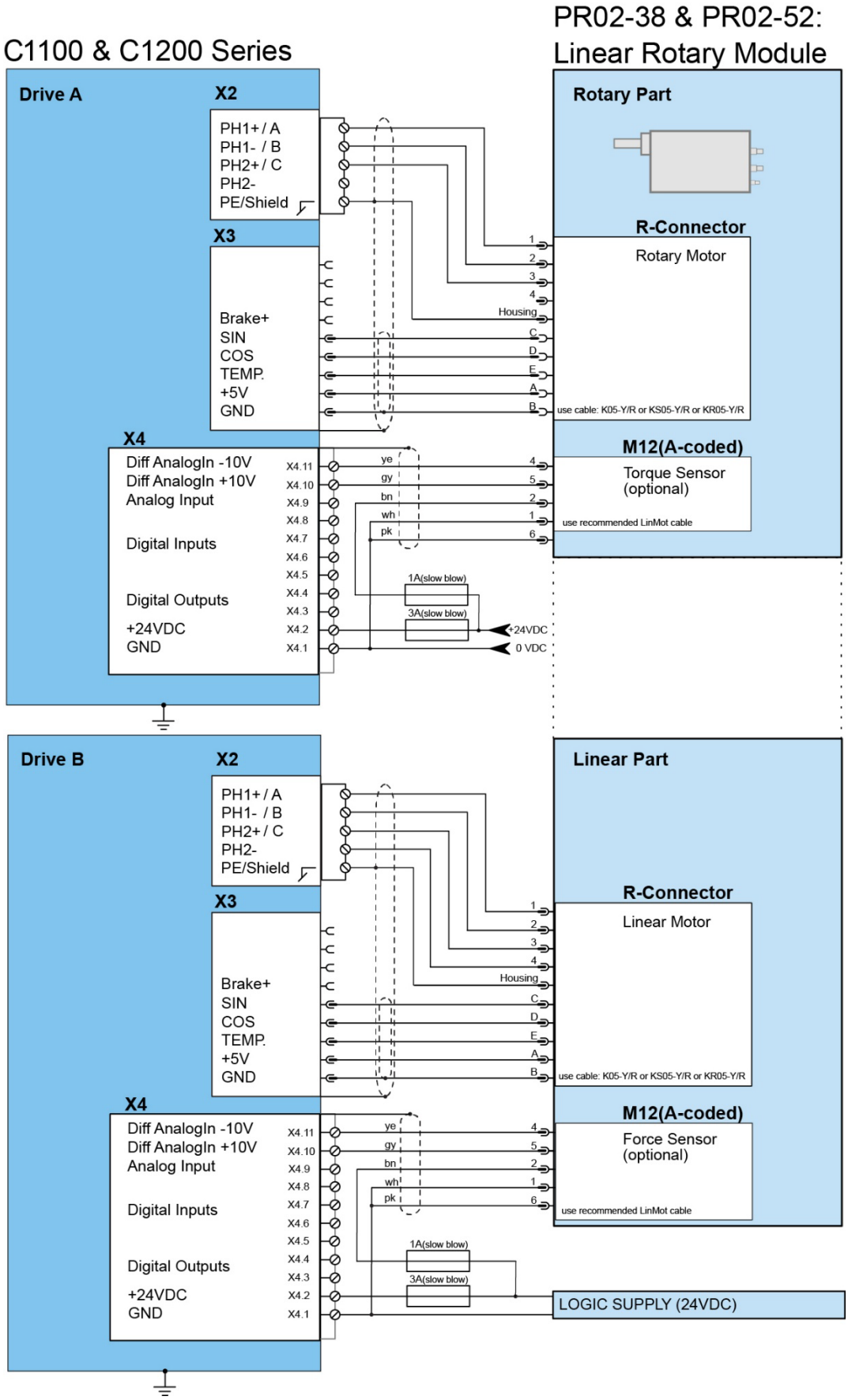

5.1.3 Overview of the Connectors

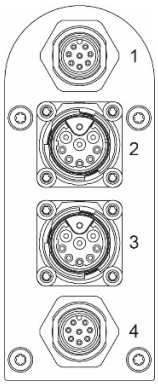

Pos. 1: Force sensor
Pos. 2: Rotary motor
Pos. 3: Linear motor
Pos. 4: Torque sensor

5.1.4 Connector Wiring Linear Rotary Motor

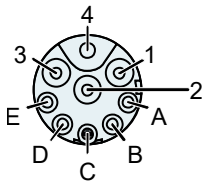

View: Motor connector, plug side

Connector wiring	Linear Motor: R-Connector	Rotary Motor: R- Connector	Wire colour Motor cable
Ph 1+ / Ph A	1	1	red
Ph 1- / Ph B	2	2	pink
Ph 2+ / Ph C	3	3	blue
Ph 2- / (-)	4	4 (not connected)	grey
+5VDC	A	A	white
GND	B	B	Inner shield
Sin	C	C	yellow
Cos	D	D	green
Temp.	E	E	black
Shield	Housing	Housing	Outer shield

Extension cables are double shielded. The two shields of the extension cables must not be connected together: the inner shield of the extension cables is used as GROUND and must be connected to GROUND*; only the outer shield must be connected to SHIELD* of the connector.

5.1.5 Connector Wiring Torque Measuring Shaft

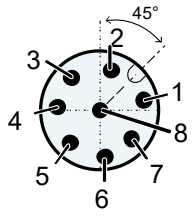

View: Motor connector, plug side

Connector wiring	Torque Sensor: M12 Connector (A-coded)	Wire colour Sensor cable
Supply GND	1	white
Supply 24V (approx. 80 mA @ 24VDC)	2	brown
Do not connect	3	green
Torque -	4	yellow
Torque +	5	grey
AGND / reference ground for the torque sensor signal (isolated from supply GND; connect to reference GND of the analogue input on the servo drive).	6	pink
Do not connect	7	blue
Do not connect	8	red

Bridges from Supply Ground and Signal Ground

- PIN 4 (force -) and PIN 1 (supply GND) are internally galvanically isolated and must not be connected to each other. This applies to sensors with a 10-digit serial number. Format = 0123.456.789.
- For torque sensors with 9-digit serial number (format = 123456789) PIN 4 (torque -) and PIN 1 (supply GND) may be bridged at the supply source (not at the transducer), if necessary, because the galvanic isolation is not present there. Make the connection as close as possible to the drive to avoid potential differences with respect to the drive GND

- The 24VDC supply must be protected with a 1AT fuse.
- The +24V supply must not be connected / disconnected when voltage is present. The DC supply must not be switched on the secondary side of the power supply unit.
- It is recommended to connect pin 6 (AGND) to the reference ground of the analogue input of the drive - in case of LinMot drives pin X4.1. realise connection as close to the drive as possible to avoid potential differences compared to the drive GND.
- External EMC circuitry: a ceramic capacitor 100nF / 50V can optionally be soldered between pin 4 and pin 5 on the evaluation electronics to reduce conducted interference.

5.1.6 Connector Wiring Force Sensor

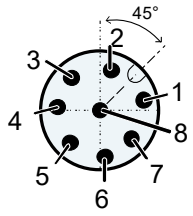

View: Motor connector, plug side

Connector wiring	Torque Sensor: M12 Connector (A-coded)	Wire colour Sensor cable
Supply GND	1	white
Supply 24V (approx. 50 mA @ 24VDC)	2	brown
Do not connect	3	green
Force -	4	yellow
Force +	5	grey
AGND / Reference ground for force sensor signal (Isolated from PGND, connect to reference GND of analog input on servo drive.)	6	pink
Do not connect	7	blue
Do not connect	8	red

Bridges from Supply Ground and Signal Ground

- PIN 4 (power -) and PIN 1 (supply GND) are internally galvanically isolated and must not be connected to each other.

- The 24VDC supply must be protected with a 1AT fuse.
- The +24V supply must not be connected / disconnected when voltage is present. The DC supply must not be switched on the secondary side of the power supply unit.
- It is recommended to connect pin 6 (AGND) to the reference ground of the analogue input of the drive - in case of LinMot drives pin X4.1. realise connection as close to the drive as possible to avoid potential differences compared to the drive GND.
- External EMC circuitry: a ceramic capacitor 100nF / 50V can optionally be soldered between pin 4 and pin 5 on the evaluation electronics to reduce conducted interference.

5.2 Connection of Air

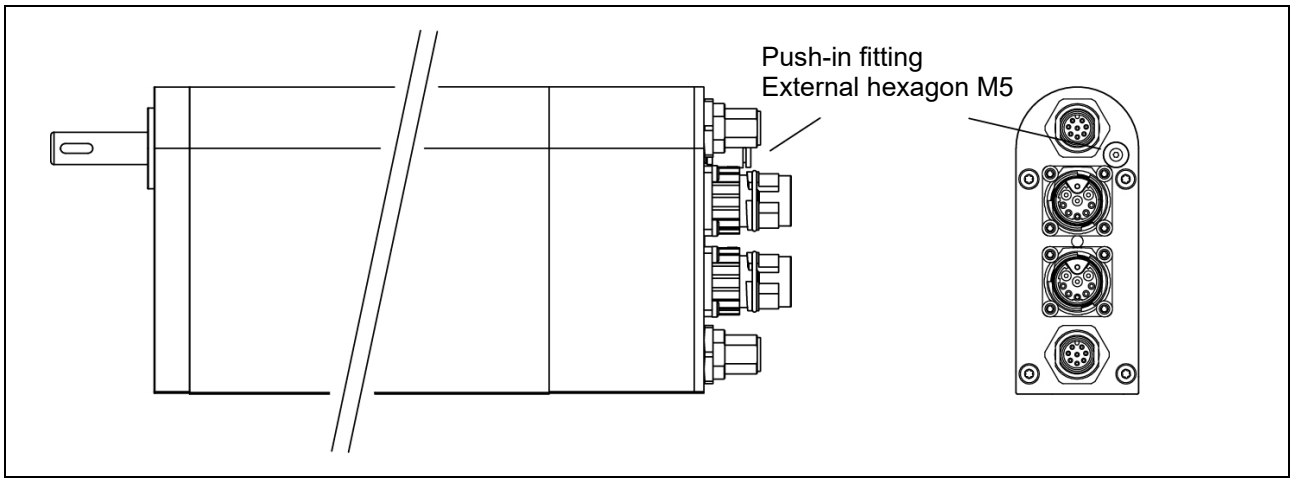

The PR02-38 is optionally equipped with an air connection. At the rear of the motor, above the electrical connectors, there is a pneumatic push-in fitting (external hexagon M5) for a Ø 4 mm hose. Inside the motor, a Ø 4 mm air hose is laid along the rotating shaft, which has a continuous hole diameter of Ø 2.5 mm. This enables the user to implement pneumatic applications with an operating pressure of max. 6 bar.
In the case of vacuum application, it is recommended to use a unit with sufficient power, as experience has shown that all air coupling points generate small losses.

6 Start-up

Please note that linear rotary motors of the PR02 product family need at least LinMot-Talk Version 6.7. It's not recommended to use older LinMot-Talk versions.

6.1 Linear Motor and Rotary Motor

Linear motor and rotary motor are electrically independent units. The linear rotary motor can therefore be commissioned sequentially. It does not matter which motor (linear motor or rotary motor) is commissioned first.
The various parameters for the linear motor and the rotary motor are set on the drive side using the corresponding wizard in the LinMot Talk configuration program.

Do not drive into the internal mechanical stops!
It must always be ensured that the linear motor never moves into the lower or upper internal stop during operation, as otherwise the linear rotary motor and the force sensor may be damaged! The inner stops may be used for homing purposes; the homing speed must not exceed 0.01 m/s.

6.2 Default Values of the Coordinate System

6.2.1 Angle of Rotation

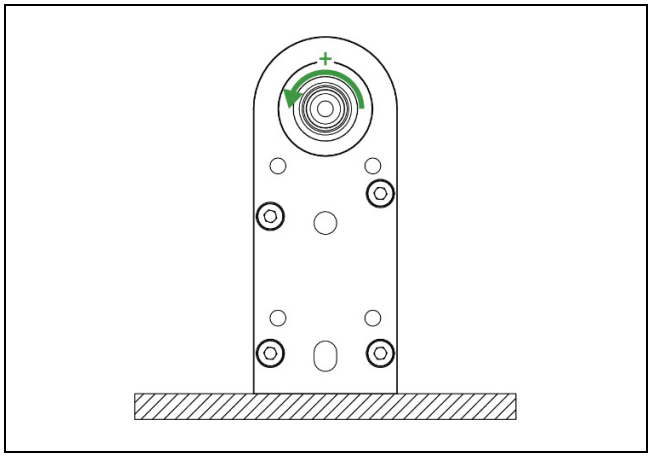

Looking into the shaft, the counterclockwise counting direction of the rotation angle is defined as positive.

6.2.2 Position

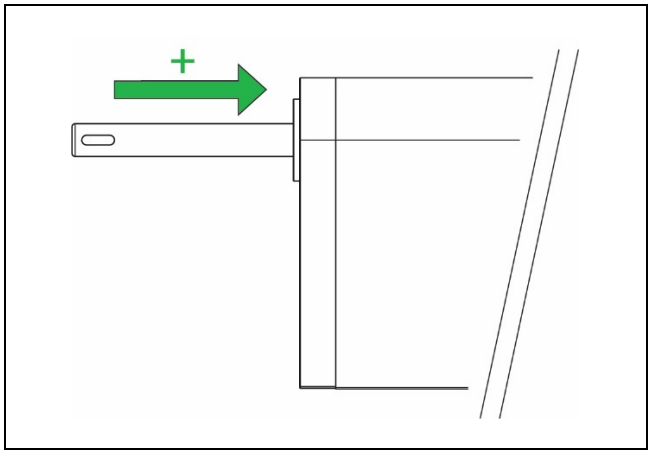

With regard to the motor, the positive counting direction of the position is defined by retracting the linear rotary shaft.

6.3 Torque Measuring Shaft

Linear rotary motors of the LinMot PR02 motor family can optionally have a torque measuring shaft built into the module. Please make sure that the option „Torque measuring shaft“ is selected during the ordering process. Fitting of the torque measuring shaft afterwards is not possible.

6.3.1 Torque Operating Direction

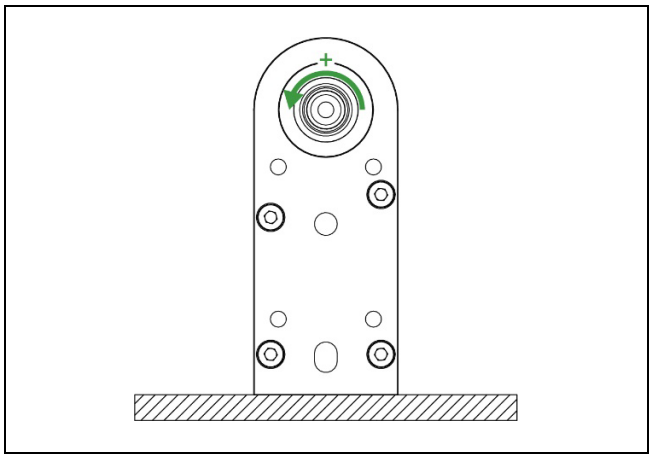

Looking into the shaft, the anti-clockwise direction is defined as positive.

The direction of rotation can be changed from LinMot-Talk version 6.8 onwards. This has an influence on the parameterization of the torque measuring shaft.

6.4 Force Sensor

Linear rotary motors of the LinMot PR02 motor family can optionally have a force sensor built into the module. Please make sure that the option „Force sensor“ is selected during the ordering process. Fitting of force sensor afterwards is not possible.

6.4.1 Force Operating Direction

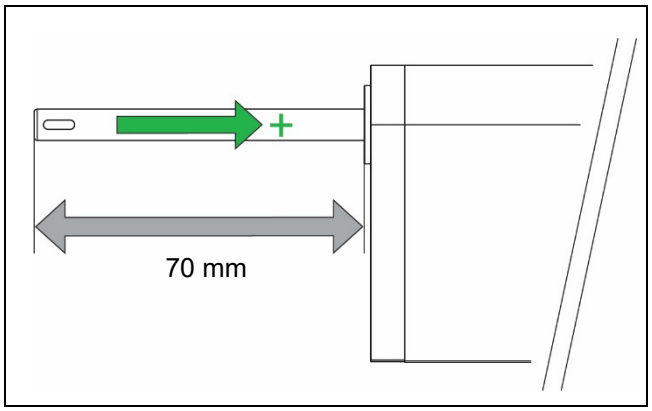

Looking to the motor, the positive stroke (force) direction is defined by retracting the linear rotary shaft.

The direction of stroke can be changed from LinMot-Talk version 6.8 onwards. This has an influence on the parameterization of the force sensor as the positive force direction will change as well.

6.5 Magnetic Spring MagSpring®

LinMot PR02 linear rotary motors can optionally be equipped with a MagSpring. Please ensure that the "MagSpring" option is selected during the ordering process. The MagSpring cannot be retrofitted.

6.5.1 Force Direction

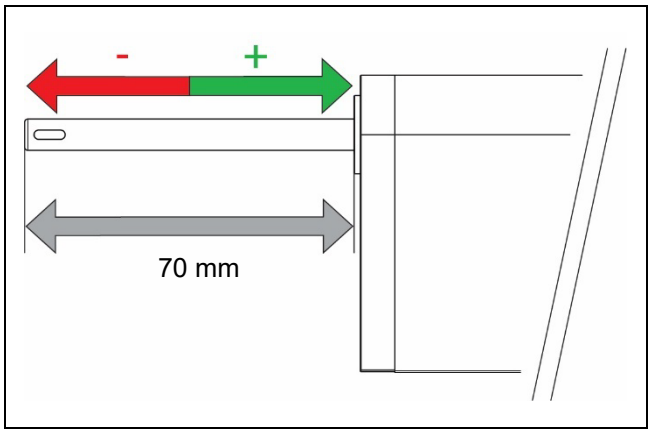

The built-in MagSpring is offered in 2 operating directions. With the positive acting MagSpring, the linear rotary shaft is pulled in and with the negative acting MagSpring, the shaft is ejected.

The order suffix is given in the following table.

	Positive force direction	Negative force direction
MagSpring 11 N	MS11	MS61
MagSpring 17 N	MS12	MS62
MagSpring 22 N	MS13	MS63

6.6 Plug and Play Function for Linear Rotary Motors

LinMot linear rotary motors of the latest generation are Plug and Play capable (see motor label "PnP"). This means that they register with the drive independently. The module- and motor-specific parameters are automatically stored in the drive and the motor is ready for operation.

Application-specific parameters, such as cable length, load mass, PID control settings etc. can be entered by the user using the Motor Wizard.

To do this, click on the Motor Wizard symbol in the task bar of the LinMot-Talk software.
Then follow the sequence of steps from chapter 6.7.2.

6.7 Setting Motor Parameters

The various parameters for the linear motor and the rotary motor are set via the corresponding motor wizard in the LinMot Talk configuration program. To open the wizard, select the "Motor Wizard" icon in the task bar.

6.7.1 Selection of the Motor Data Files

If the connected motor is a module with plug and play functionality, the following step can be skipped.

If no "PnP" symbol is printed on the motor nameplate, the module and motor-specific parameters must be loaded manually via the Motor Wizard. So-called motor data files are available for this purpose. The motor data file corresponding to the module (*.adf or *.adp) must be selected in the first step of the Motor Wizard. The linear rotary motors are located in the installation directory of the LinMot-Talk software (download at www.linmot.com) in the folder "Motors\LinMot Linear Rotary Motors\...".

Please contact support if the motor data files are not available.

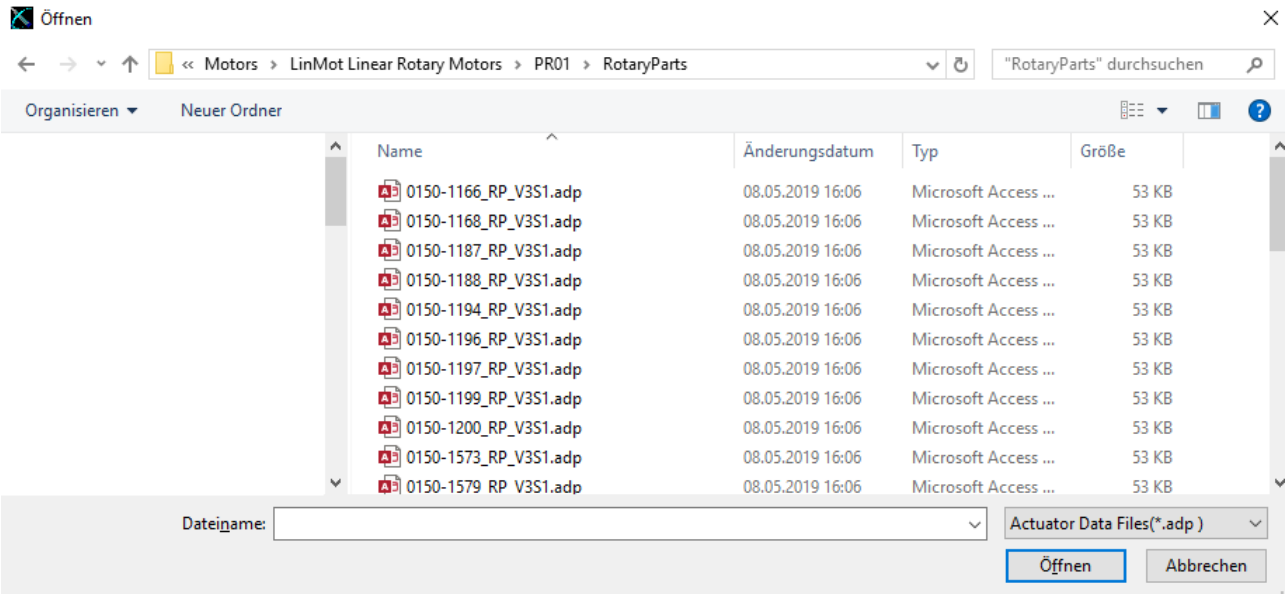

If the motor data files are not available, they can be downloaded using the function "Search for new motor files". The function is stored in the LinMot-Talk software under "Help\Update functions".

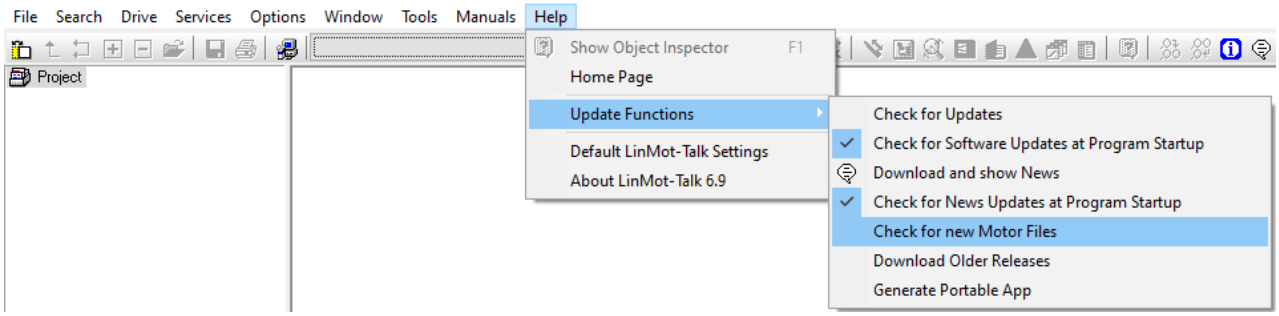

6.7.2 Application-specific Parameters

Application-specific parameters, such as cable length, load mass, PID control settings, etc. can be entered by the user using the Motor Wizard. The Motor Wizard must be started for this purpose. Once the Motor Datafile has been selected (according to the previous chapter), the Motor Wizard guides you through the menu step by step.
Application parameters should be entered as accurately as possible to ensure the best possible motor control.

6.7.3 Inverting the Coordinate System

Starting with LinMot-Talk version 6.8 the direction of the coordinate system can be selected.
Default value for rotary motors: Positive counting direction = counterclockwise (see figure chapter 6.2.1)
Default value for linear motors: Positive direction of movement = Regular (see figure in chapter 6.2.2)

> If the coordinate system is reversed, this has an influence on the current and the force/torque of the motor. In case of any uncertainties, the LinMot support should definitely be contacted.

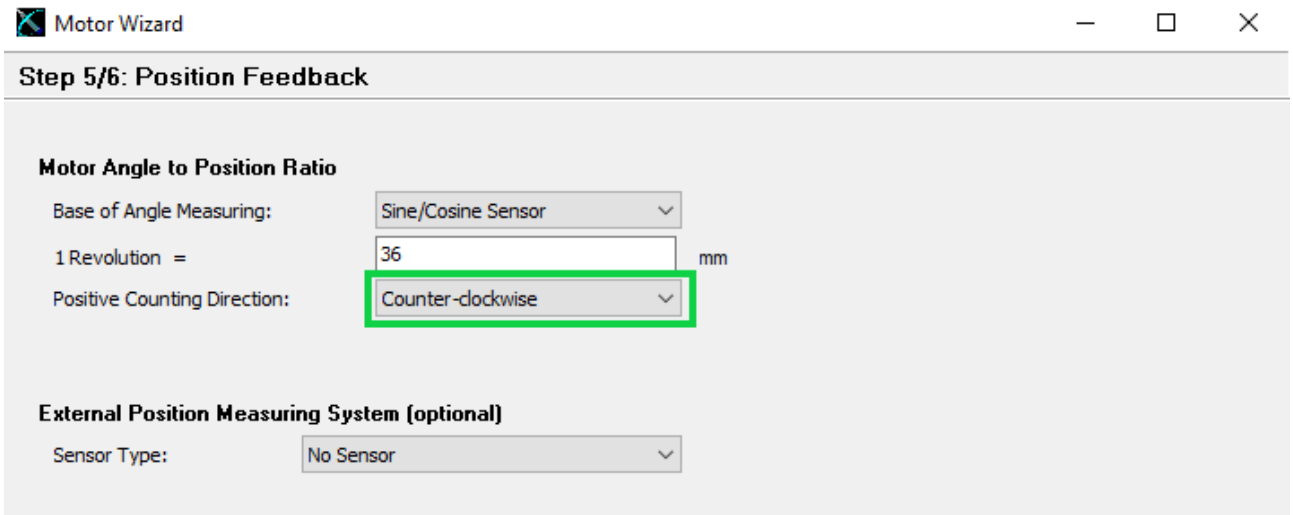

Figure: Selection of the positive counting direction (rotary motor)

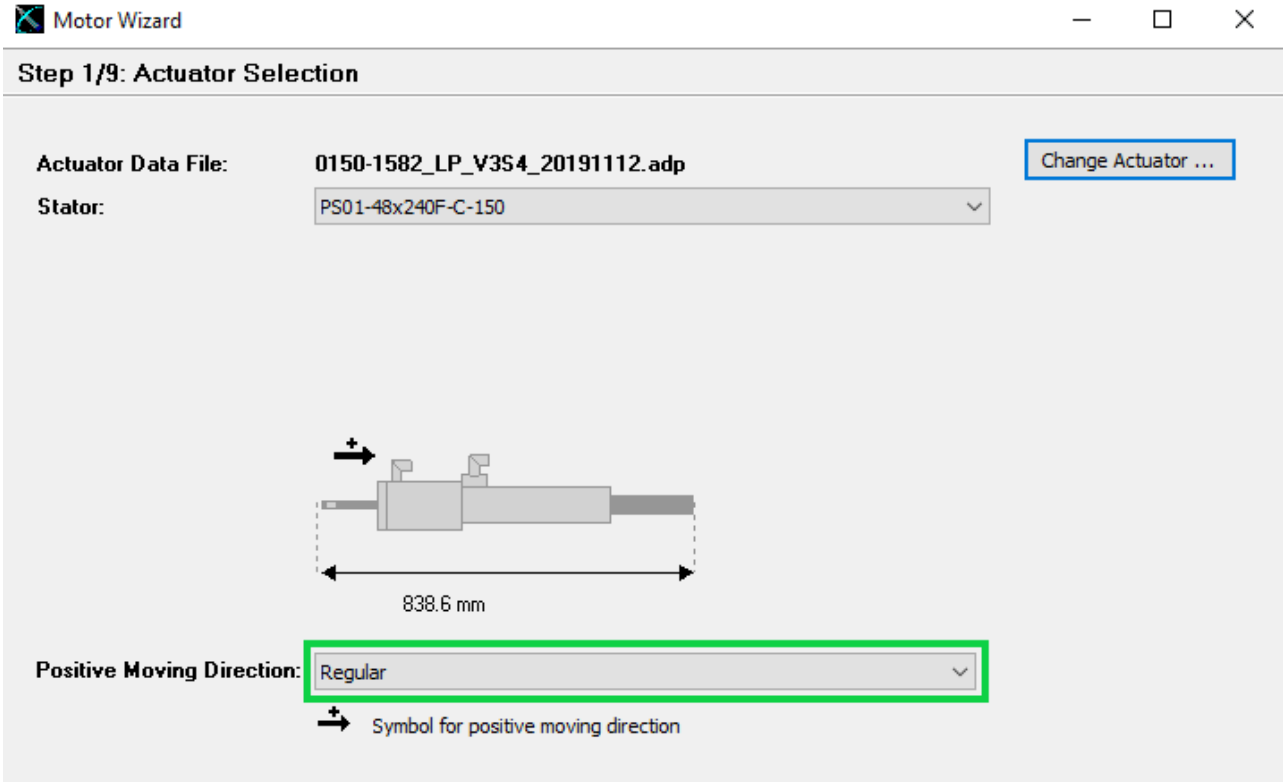

Figure: Selection of the positive direction of movement (linear motor)

6.7.4 Selection of the Linear and Rotary Unit System

In step 4 of the Motor Wizard the GUI (Graphical User Interface) of the LinMot-Talk software can be set. This setting only affects the display of the LinMot-Talk software. The resolution and scaling of the transmission data (raw data) to the higher-level PLC are retained.

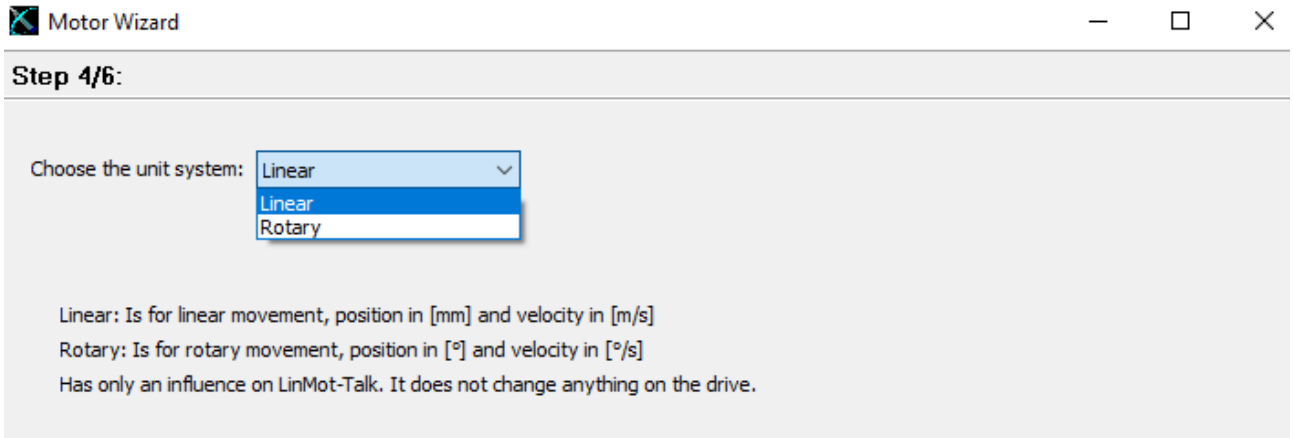

Figure: Selection of the units to be displayed in the LinMot-Talk software

6.7.5 Referencing the Linear Motor

The built-in linear motor has a position detection system which must be referenced. Various modes are available to the user for this purpose. Depending on the selected mode, the linear motor searches for a mechanical stop and/or an electronic switch, for example.

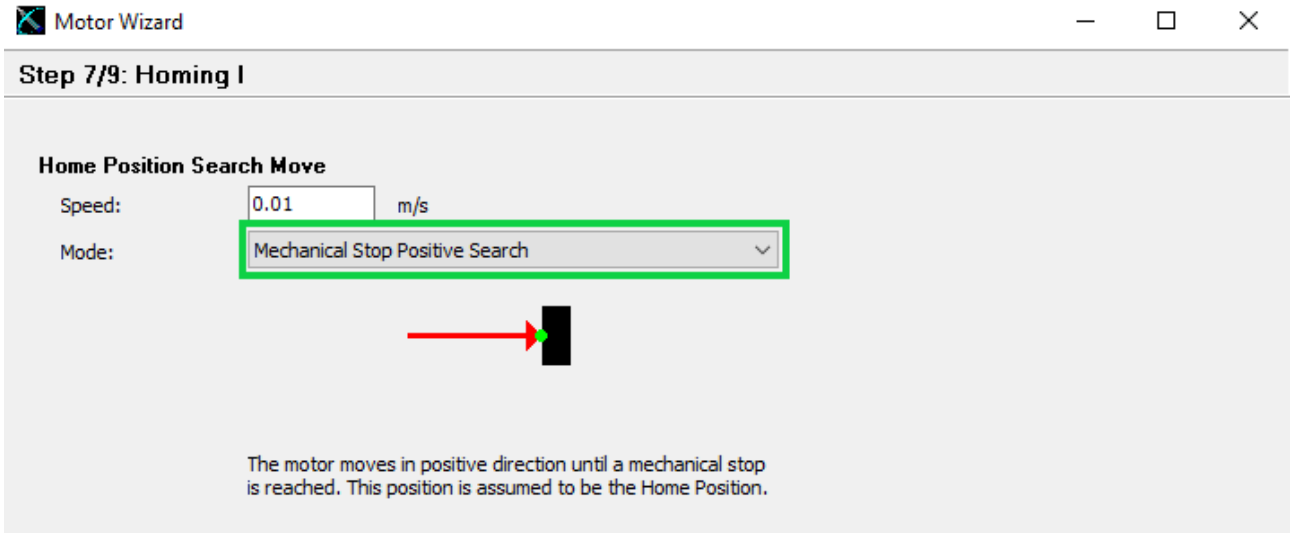

Figure: Selection of reference run linear motor

6.7.6 Referencing the Rotary Motor

The rotary motor has an integrated single-turn absolute encoder. This means that the rotary motor knows its position without any reference run after the drive is started up.

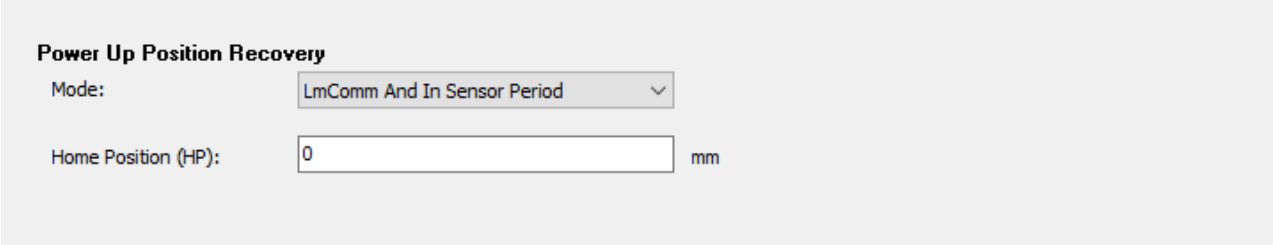

Figure: Activate the absolute encoder for rotary motors by selecting "LmComm And In Sensor Period" (default value). With parameter "Home Position" an offset to the start position can be set.

If a reference run is necessary due to mechanical events, e.g. an external gear, it is recommended to reference an external sensor. A number of options for homing are available to the user under Parameter -> Motion Control SW -> State Machine Setup -> Homing.

6.8 Initial Setup of Torque Measuring Shaft and Force Sensor

Optionally mounted torque measuring shaft and / or force sensor are high precision measuring equipment and must be handled appropriate. Wrong handling like moving fast to mechanical stop cause impacts which may exceed the maximum force defined in the data sheet. Wrong handling of the measuring equipment may damage sensors.
It's strongly recommended to follow the steps for initial setup carefully and test the correct function of measuring equipment before using in real application.

6.8.1 Software Package „Technology Function Force Control“

If a closed torque/force control loop is implemented via an internal sensor (torque or force control of the rotary/linear motor via feedback of the torque measuring shaft / force sensor to the LinMot Drive), the "TF Force Control" software package (Art. No.: 0150-2503) must be ordered. Without this software package it is not possible to control to a certain torque/force or the operation commands of the “TF Force Control” software package cannot be used.

If the signal of the torque measuring shaft / force sensor is only evaluated (PLC or LinMot Drive), the software package is not necessary.

6.8.2 Setting Parameters for Torque / Force Control

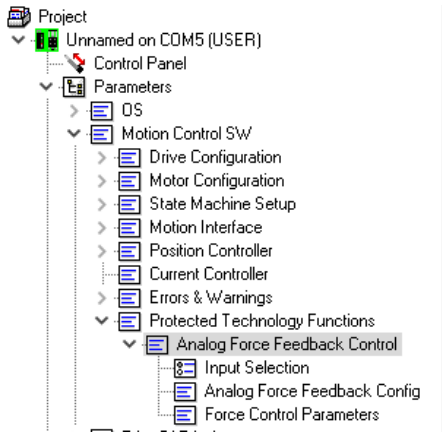

Logged into the drive, you will find all parameters to be set in the LinMot-Talk software under the path "Parameters -> Motion Control SW -> Protected Technology Functions -> Analog Force Feedback Control".

Parameter tree: Input Selection

Please select the following setting under "Input Selection":

- Input Selection (UPID 150Fh) = Diff Analog Input On X4.10/X4.11

Name	Value	Raw Data	Value...	UPID
None	Off	0004h	Off	150Fh
Analog Input On X4.9	Off	0001h	Off	150Fh
Diff Analog Input On X4.10/X4.11	On	0002h	On	150Fh

Parameter tree: Analog Force Feedback Config

Due to the definition of the DEFAULT positive direction of rotation/stroke, it is recommended to invert the +-10VDC signal via software. This means that for parameter “0V/-10V Force” the positive maximum value and for parameter “+10V Force” the negative maximum value of the torque measuring shaft/force sensor is set.
By changing the direction of rotation/stroke the setting of parameters “0V/-10V Force” and “10V Force” need to be changed as well.

- 0V/-10V Force (UPID 1501h) = Positive max. value (e.g. 2.5Nm)
- 10V Force (UPID 1502h) = Negative max. value (e.g. -2.5Nm)
- Speed Filter Time (UPID 150Ah) = 1000us
- Acceleration Filter Time (UPID 150Dh) = 1000us

Name	Value	Raw Data	Value...	UPID
0V/-10V Force	2.49981486015...	110Bh	2.499...	1501h
10V Force	-2.4998148601...	EEF5h	-2.49...	1502h
Speed Filter Time	1000 us	03E8h	1000	150Ah
Acceleration Filter Time	1000 us	03E8h	1000	150Dh

Parameter tree: Force Control Parameters

The parameters for the torque/force control loop are set here. A PID controller, a few feed forward parameters (FF parameters) and a parameter for limiting the maximum control current (Force Ctrl Max Current) are available for this purpose.

Recommendation:

To begin with, work with a pure I-controller to prevent the motor from oscillating during torque control.

Limit the maximum control current in order to avoid damage if incorrect handling occurs during commissioning.

6.8.3 Initial Test of a Torque Measuring Shaft / Force Sensor

It's recommended to proceed an initial test of a sensor using the LinMot-Talk Variable before entering operational state.

1. Log into the drive using LinMot-Talk software and open the control panel.
2. Switch on the motor (e.g. rotary motor) using the ControlWord (Switch On). The motor will stay within position control mode.
3. Using the button "Add Variable" add the variables "Target Force" and "Measured Force" (MC SW Force Control).

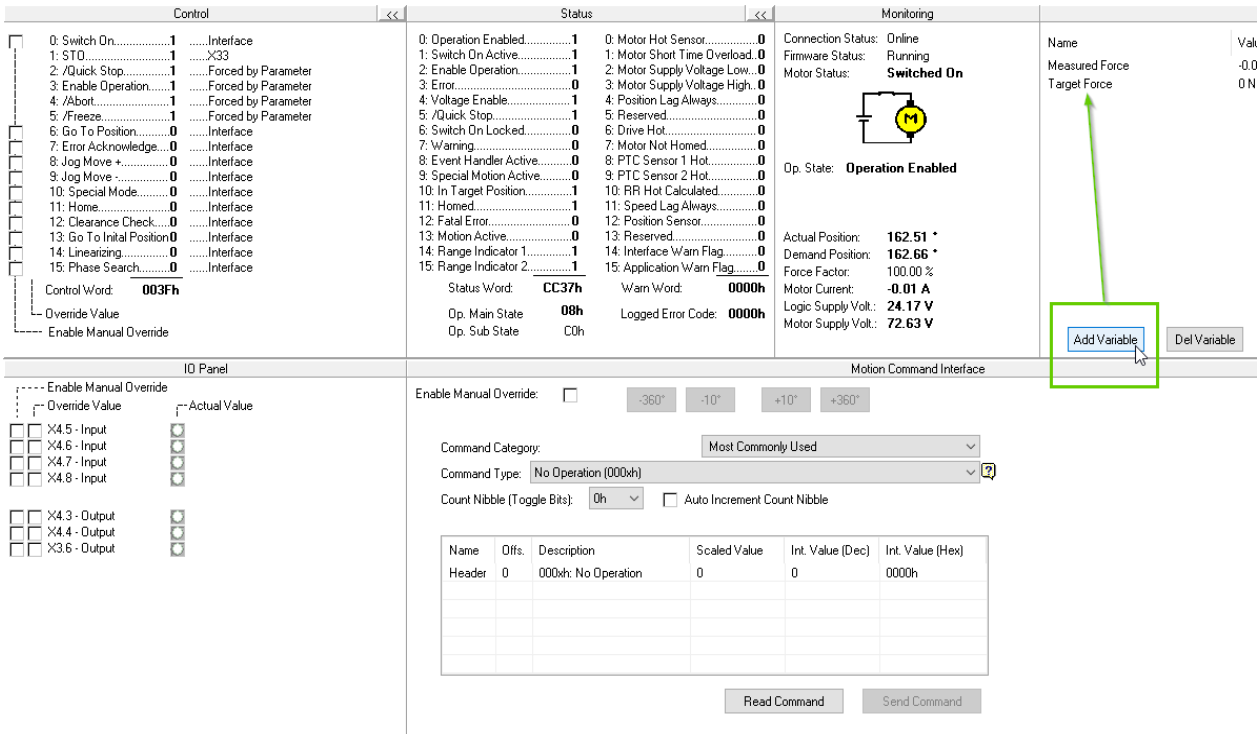

4. Depending which sensor you may test, turn (torque measuring shaft) or push/pull (force sensor) now slightly on the linear rotary shaft. The variable “measured force” should increase or decrease corresponding to the variable “Motor Current”.

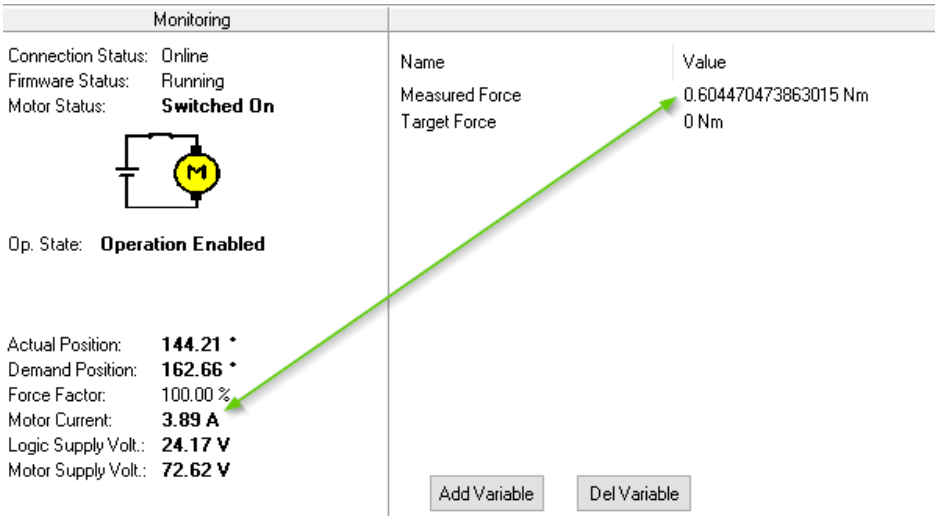

- If there is no change within variable “Measured Force” detectable check the wiring of the sensor.
- If the value of variable “Measured Force” is changing its value within different direction as variable “Motor Current” shows please check wiring or parameter setting “Analog Force Feedback Setting”. DON’T ENTER FORCE CONTROL MODE!

7 Accessories

7.1 Overview

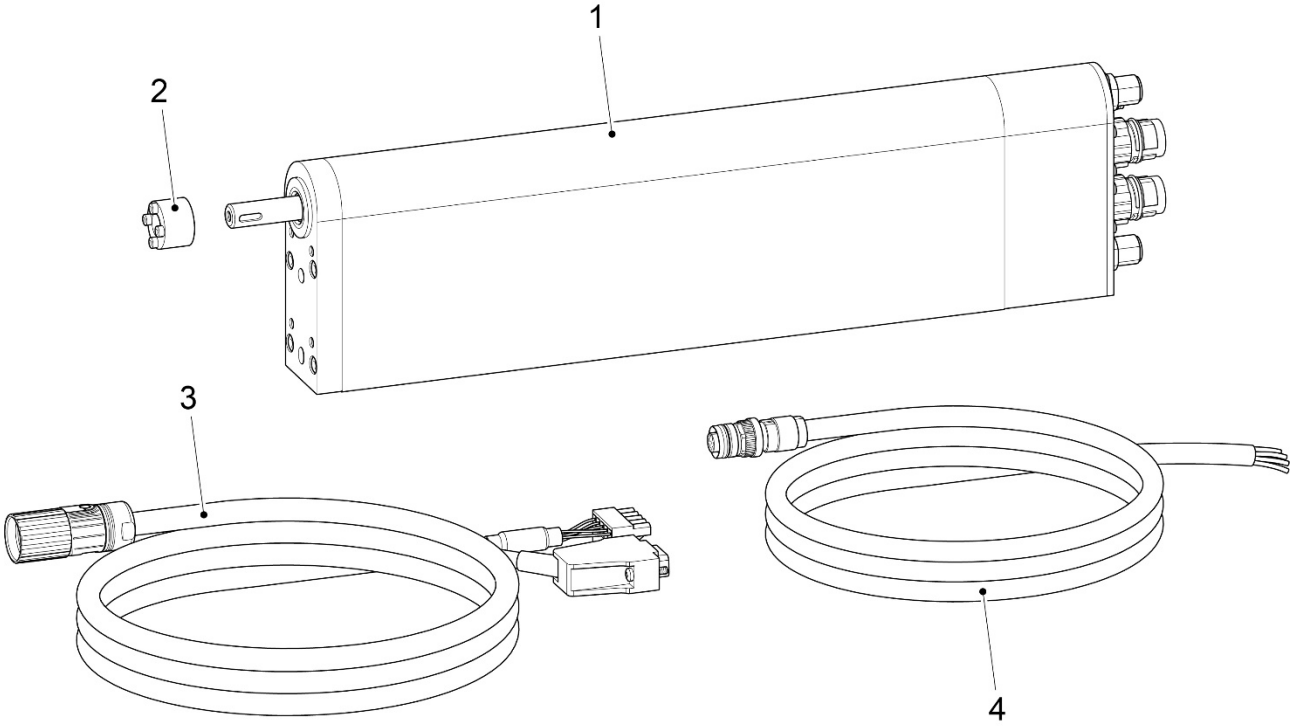

1. Linear Rotary Motor PR02
2. Shaft-Hub Clamping
3. Motor Cable
4. Sensor Cable

7.2 Motor Cable

Standard Cable

Item	Description	Item-No.
K05-W/R-2	Motor Cable W/R, 2 m	0150-2119
K05-W/R-4	Motor Cable W/R, 4 m	0150-2120
K05-W/R-6	Motor Cable W/R, 6 m	0150-2121
K05-W/R-8	Motor Cable W/R, 8 m	0150-2122
K05-W/R-	Motor Cable K05-W/R, Custom length	0150-3262

Item	Description	Item-No.
K05-Y/R-2	Motor Cable Y/R, 2 m	0150-2421
K05-Y/R-4	Motor Cable Y/R, 4 m	0150-2422
K05-Y/R-6	Motor Cable Y/R, 6 m	0150-2423
K05-Y/R-8	Motor Cable Y/R, 8 m	0150-2424
K05-Y-Fe/R-	Motor Cable K05-Y-Fe/R, Custom length	0150-3501

Trailing Chain Cable

Item	Description	Item-No.
KS05-W/R-4	Trailing Chain Cable W/R, 4 m	0150-2106
KS05-W/R-6	Trailing Chain Cable W/R, 6 m	0150-2131
KS05-W/R-8	Trailing Chain Cable W/R, 8 m	0150-2107
KS05-W/R-	Trailing Chain Cable KS05-W/R, Custom length	0150-3256

Item	Description	Item-No.
KS05-Y/R-4	Trailing Chain Cable Y/R, 4 m	0150-2433
KS05-Y/R-6	Trailing Chain Cable Y/R, 6 m	0150-2434
KS05-Y/R-8	Trailing Chain Cable Y/R, 8 m	0150-2435
KS05-Y-Fe/R-	Trailing Chain Cable KS05-Y-Fe/R, Custom length	0150-3507

Robot Cable

Item	Description	Item-No.
KR05-W/R-	Robot Cable KR05-W/R, Custom length	0150-3336
KR05-Y-Fe/R-	Robot Cable KR05-Y-Fe/R, Custom length	0150-3512

7.3 Sensor Cable

Ordering information

Item	Description	Item-No.
KSS02-08-./M12A8-10	Sensor cable for PR02, 10m, open cable end	0150-2959
KSS02-08-./M12A8-	Special cable with freely selectable length: Sensor cable for PR02, open cable end	0150-4614

7.4 Shaft-Hub Clamping

Since both rotary and linear movements are carried out with linear motors, a type of shaft load attachment must be selected which can absorb both torques and forces in the longitudinal direction. A friction-locked connection is created with the aid of a shaft-hub clamping.

Ordering information

Item	Description	Item-No.
RS01-SS10x20	Shaft-hub clamping for 10mm shaft	0150-4531

7.4.1 Dimensions and Technical Data

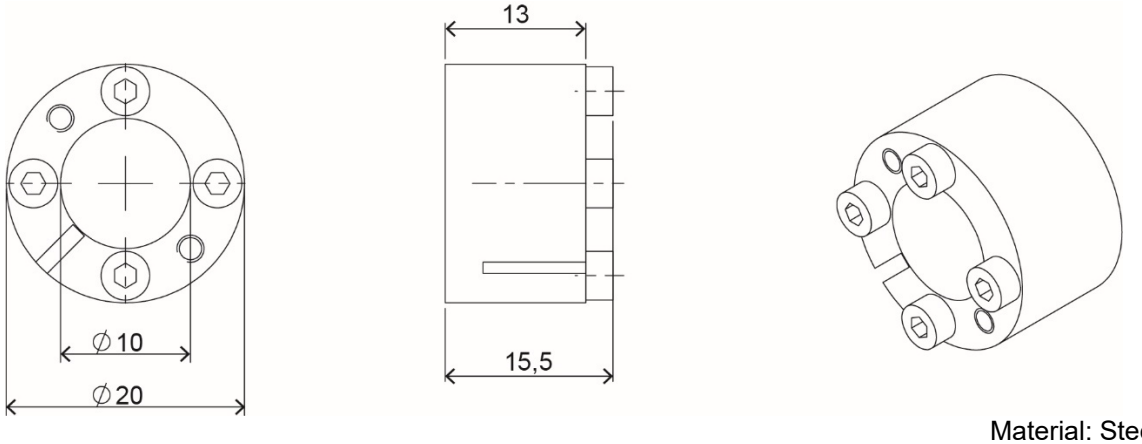

Material: Steel

Item	For shaft	T [Nm]	F_{ax} [kN]	T_A [Nm]	D [mm]	Weight [g]
RS01-SS10x20	10 mm	19	4	1.2	20	19

T = transmittable torque at Fax = 0.
F_{ax} = transmittable axial force at T = 0.
T_A = fastening torque of the screws.
D = external exposure tolerance.

7.4.2 Mounting

- The shaft-hub clamping has to sit inside the bore by at least the clamp length (13 mm).
- Slightly oil the shaft-hub clamping before mounting, do not use molybdenum disulphide or fat.
- Tighten screws opposite each other 180 degrees offset in several steps to tightening torque T_A (see above for details).
- By tightening the screws, the inner diameter is reduced and the outer diameter is increased. This ensures a stable clamping of the outer receptacle.

8 Maintenance and Test Instructions

8.1 Maintenance

The linear rotary motors are provided with initial lubrication at the factory. Needs-based Maintenance / cleaning is only necessary if the motors are heavily soiled.
Under normal industrial, Central European conditions (5-day week with 8 hours of operation per day), one inspection at the recommended interval is sufficient.
The inspection cycle must be shortened if there are heavy motor loads or deviating conditions. These conditions are e.g.:

- Permanent fouling
- Direct sunshine
- Low Humidity
- Outdoor operation
- Increased operating temperature
- Other special environmental conditions

Maintenance or disassembly of the linear rotary motors may only be carried out by trained companies:

- LinMot
- Companies qualified by LinMot

If the linear rotary motor is not opened by one of the above-mentioned companies, the warranty claim will be invalidated.

Ordering Information

Item	Description	Item-No.
Maintenance PR02-38: Replacement of all wear parts, cleaning and lubrication	Maintenance PR02-38	0120-4005

8.1.1 Preventive Inspection every 6'000h

To ensure the smoothest possible operation, a preventive inspection is recommended every 6,000 hours of operation or after one year under normal industrial, central european conditions.

When inspecting the motors, the following points must be checked:

a) Visual inspection of all wearing parts such as seals and wipers
b) Does the motor operating temperature or the motor current consumption correspond to the expected empirical values?
c) Are any suspicious or unknown noises or vibrations recognisable during operation?
d) Is smooth rotary and linear movement (attention with MagSpring) possible when de-energised?
e) Is there a light film of grease on the extended linear rotary shaft?

If one of the above points no longer applies, maintenance by LinMot or by a company qualified by LinMot is recommended (see chapter 8.1.2).

8.1.2 Needs-based maintenance

During needs-based maintenance, the linear rotary motor is completely disassembled, cleaned and relubricated. Among other things, the steps listed below are carried out:

- Replacement of seals and wipers
- Cleaning / lubrication of mechanically moving parts
- Replacement of the linear rotary shaft
- Replacement of all ball bushings / plain bearings / couplings / carriers
- Replacement of all air connections and seals
- Revision of the linear motor slider
- Final test & functional test of linear rotary motor
- Leak test for vacuum & compressed air with existing "air feed-through" option
- Replacement of the pneumatic cylinder if the "pneumatic pusher" option is available

Maintenance does not include the recommended annual calibration of the optionally installed torque measurement shaft and/or force measurement sensor. This must be ordered separately (see chapter Calibration).

8.1.3 Lubrication Specification

The following lubricants are used in the linear rotary motor:

Item	Description
LGFP2	SKF Aluminium Lubricant
LU02*	Lubricant for linear motors*

** LinMot LU02 Lubricant corresponds to KLÜBERSYNTH UH1 14-31 which was developed for the food processing industry.*

Both lubricants are food grade and NSF H1 approved. Safety data sheets are available on request at support@linmot.com.

8.2 Stator Checking

The following tables show the resistive value between the different connector pins for each stator type. If the value is not within a range of +/- 10% the stator may be damaged (temperature of the stator for all measurements: 20°C).

8.2.1 Linear Motor PS01-23x80F-HP-R

Configuration	Pins	Resistance
Phase 1+ / Phase 1-	Pin 1 / Pin 2	4.1 Ω
Phase 2+ / Phase 2-	Pin 3 / Pin 4	4.1 Ω
5V / GND	Pin A / Pin B	505 Ω
Sensor Sine / GND	Pin C / Pin B	37.5 kΩ
Sensor Cosine / GND	Pin D / Pin B	37.5 kΩ
Temp. Sensor / GND	Pin E / Pin B	10.5 kΩ
Phase / GND	Pin 1,2,3,4 / Pin B	>20 MΩ
All Pin / Shield	Pin 1-E / Housing	>20 MΩ

8.2.2 Rotary Motor Stator RS01-38x51

Configuration	Pins	Resistance
Phase A / Phase B	Pin 1 / Pin 2	2.2 Ω
Phase A / Phase C	Pin 1 / Pin 3	2.2 Ω
5V / GND	Pin A / Pin B	155 Ω
Sensor Sinus / GND	Pin C / Pin B	33 kΩ
Sensor Cosine / GND	Pin D / Pin B	33 kΩ
Temp. Sensor / GND	Pin E / Pin B	10 kΩ
Phase / GND	Pin 1,2,3,4 / Pin B	>20 MΩ
All Pin / Shield	Housing	>20 MΩ

8.3 Calibration of Torque Measuring Shaft and Force Sensor

Sensors installed in the linear rotary motor (torque measuring shaft / force sensor) are factory calibrated (valid for 2 years). After the initial commissioning it is recommended to have the sensors calibrated annually by LinMot.

Ordering Information

Item	Description	Item-No.
Maintenance: Calibration Force Sensor PR02	Calibration Force Sensor PR02	0150-4419
Maintenance: Calibration Torque Sensor PR02	Calibration Torque Sensor PR02	0150-4163

9 Transport and Storage

- The storage area must be dry, dust-free, frost-free and vibration-free.
- The relative humidity must be less than 60 % (non-condescending!).
- Prescribed storage temperature: -15 °C…70 °C
- The motor must be protected against extreme weather conditions.
- The air in the storage area must not contain any harmful gases.

10 Dimensions

10.1 Linear Rotary Motor PR02-38x51-R_23x80F-HP-R-70-L_MS0x_TS0x_FS0x

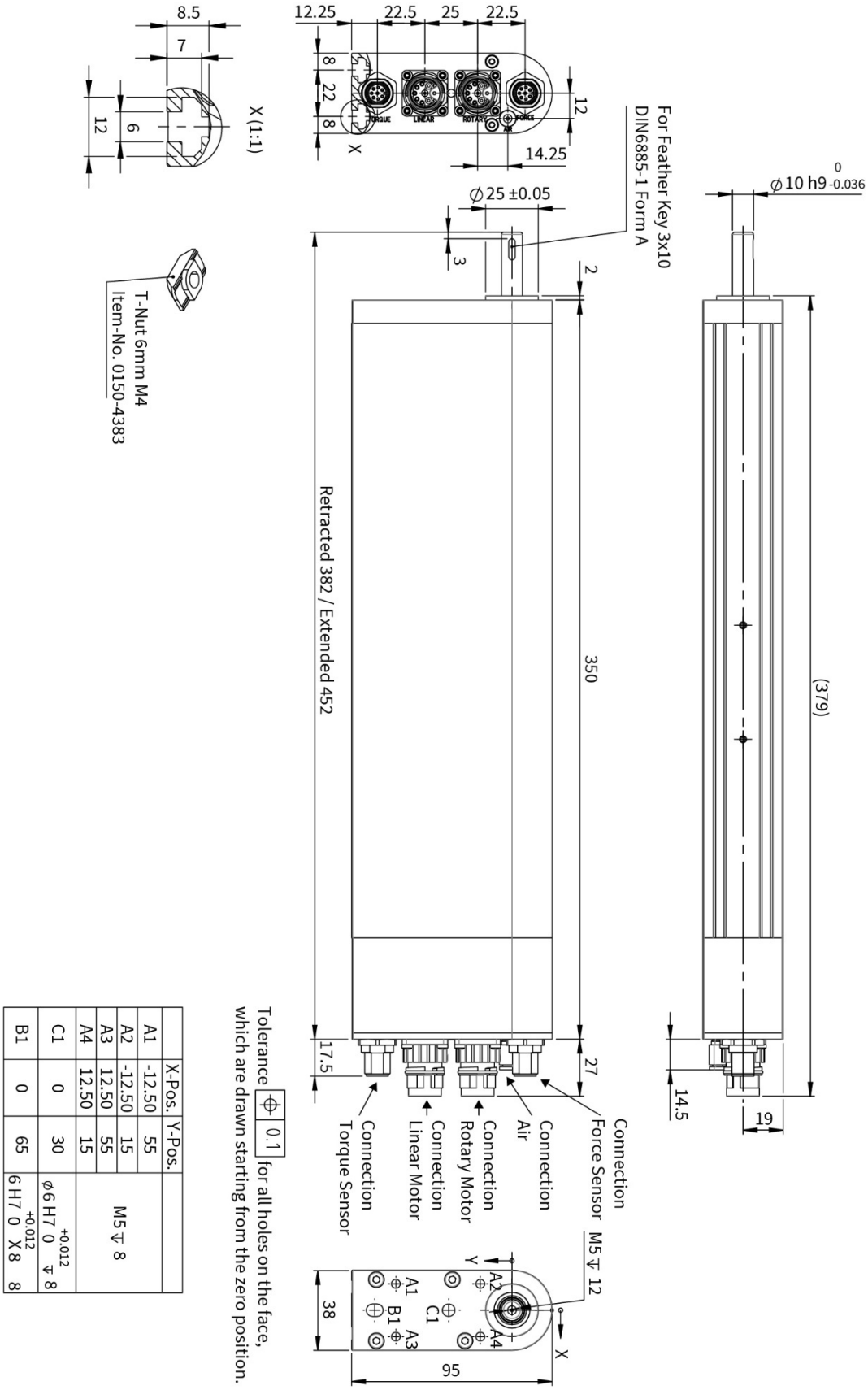

	X-Pos.	Y-Pos.
A1	-12.50	55
A2	-12.50	15
A3	12.50	55
A4	12.50	15
C1	0	30
B1	0	65

M5 ↧ 8
ø6 H7 0 +0.012 ↧ 8
6 H7 0 +0.012 X 8 8

in mm

10.2 Connection of the Motor Cable

When using a KS05-04/05 High-Flex cable, a minimum bending radius of 60 mm must be maintained when the application is in motion. In this case, the following drawing shows the corresponding dimensions of the PR02 linear rotary motor.

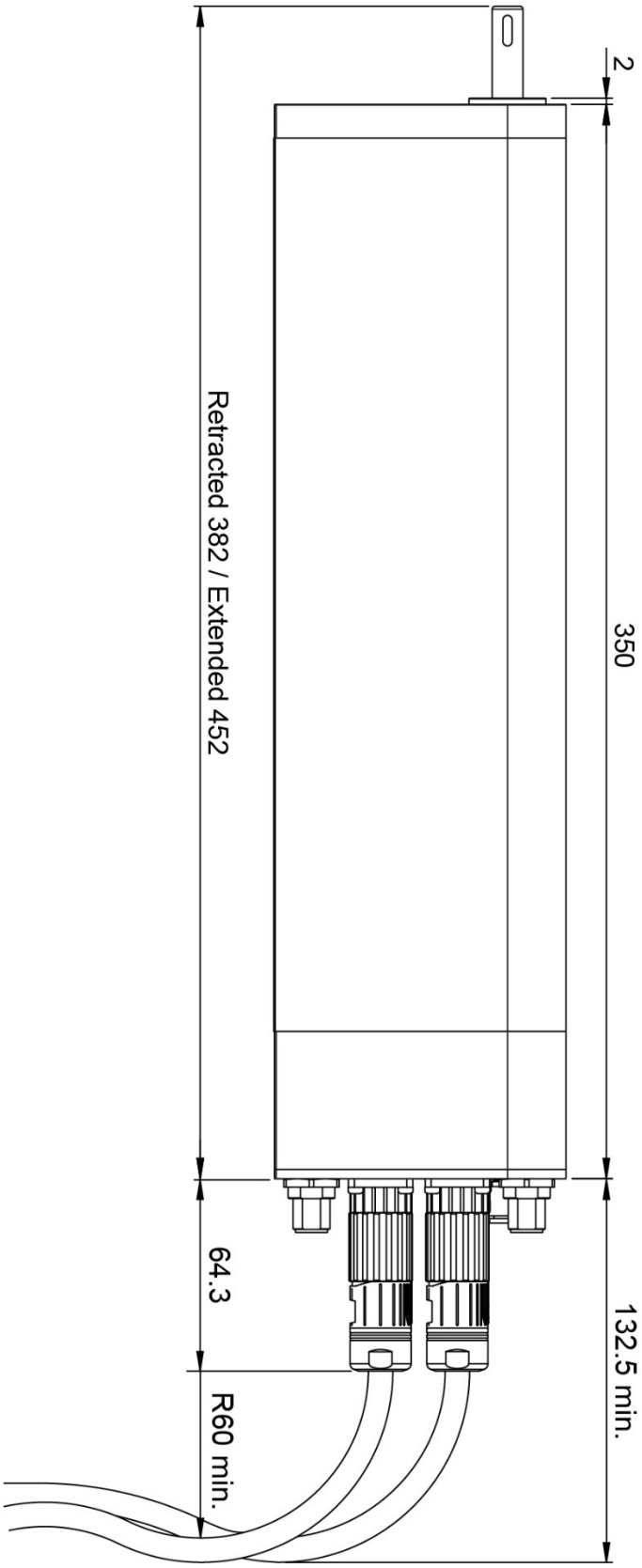

in mm

11 International Certificates

Europe	See chapter 11.1 “EU Declaration of Conformity CE-Marking”
UK	See chapter 11.2 “UK Declaration of Conformity UKCA-Marking”
IECEE CB SCHEME	Ref. Certif. Nr. CH-8521 See chapter 11.3 “CB Test Certificate”
USA / Canada	File Number UL-US-L354430-11-22900202-1 File Number UL-CA-L354430-31-22900202-1 See chapter 11.4 “UL Certificate”

11.1 EU Declaration of Conformity CE-Marking

Wir
We
Nous

NTI AG
Bodenaeckerstrasse 2
8957 Spreitenbach

erklären in alleiniger Verantwortung, dass das Produkt
declare under our sole responsibility that the product
declarons sous notre seule responsabilité que le produit

Produkt	Art-Nr.
PR02-38x51-R_23x80F-HP-R-70_MS00_TS00	0150-4160
PR02-38x51-R_23x80F-HP-R-70_MS11_TS00	0150-4161
PR02-38x51-R_23x80F-HP-R-70_MS12_TS00	0150-4231
PR02-38x51-R_23x80F-HP-R-70_MS13_TS00	0150-4162
PR02-38x51-R_23x80F-HP-R-70-L_MS00_TS00	0150-4159
PR02-38x51-R_23x80F-HP-R-70-L_MS11_TS00	0150-2988
PR02-38x51-R_23x80F-HP-R-70-L_MS12_TS00	0150-4232
PR02-38x51-R_23x80F-HP-R-70-L_MS13_TS00	0150-4158
PR02-38x51-R_23x80F-HP-R-70_MS00_TS00-R01	0150-4677

konform ist mit den Anforderungen der Richtlinien / is conform to the provisions of directives /
est conformé aux exigences des directives,

2014/30/EU (EMC)

gestützt auf die folgenden Normen / based on the following standards / base aux normes suivants,

EN61000-6-2: 2005
EN61000-6-4: 2007 + A1: 2011

Jahr der CE-Kennzeichnung / Year of CE marking / Annee du marquage CE:

2021

Spreitenbach, 07.12.2021

Dr.-Ing. Ronald Rohner / CEO NTI AG

11.2 UK Declaration of Conformity UKCA-Marking

NTI AG / LinMot ®
Bodenaeckerstrasse 2
8957 Spreitenbach

Switzerland

Tel.: +41 (0)56 419 91 91
Fax: +41 (0)56 419 91 92

declares under sole responsibility the compliance of the products:

- Linear Rotary Motors of the Series **PR02-38**

with the EMC Regulation S.I. 2016 No. 1091.

Applied designated standards:

- **EN 61000-6-2: 2005 (Immunity for industrial environments)**
- **EN 61000-6-4: 2007 + A1: 2011 (Emission for industrial environments)**

According to the EMC regulation, the listed devices are not independently operable products.

Compliance of the regulation requires the correct installation of the product, the observance of specific installation guides and product documentation. This was tested on specific system configurations.

The safety instructions of the manuals are to be considered.

The product must be mounted and used in strict accordance with the installation instructions contained within the installation guide, a copy of which may be obtained from NTI AG.

Company: NTI AG
Spreitenbach, 23.10.2026

Dr.-Ing. Ronald Rohner
CEO NTI AG

11.3 CB Test Certificate

IEC IECEE CB SCHEME

Ref. Certif. No.

CH-8521

IEC SYSTEM FOR MUTUAL RECOGNITION OF TEST CERTIFICATES FOR ELECTRICAL EQUIPMENT (IECEE) CB SCHEME

CB TEST CERTIFICATE

Product	Linear motor
Name and address of the applicant	NTI AG Bodenäckerstrasse 2 SWITZERLAND 8957 Spreitenbach
Name and address of the manufacturer	NTI AG Bodenäckerstrasse 2 SWITZERLAND 8957 Spreitenbach
Name and address of the factory	NTI AG Bodenäckerstrasse 2 SWITZERLAND 8957 Spreitenbach
Note: When more than one factory, please report on page 2	☐ Additional Information on page 2
Ratings and principal characteristics	supplied via servo drive, see TR 17-EL-0006.E02 for details
Trade mark (if any)	LinMot
Customers's Testing Facility (CTF) Stage used	---
Model / Type Ref.	PR series PS series P04 series P05 series
Additional information (if necessary may also be reported on page 2)	---
	☐ Additional Information on page 2
A sample of product was tested and found to be in conformity with IEC	IEC 61000-6-2:2016 IEC 61000-6-4:2006, IEC 61000-6-4:2006/AMD1:2010 IEC 61000-6-7:2014
National differences	EU Group Differences; EU Special National Conditions; EU A-Deviations
As shown in the Test Report Ref. No. which forms part of this Certificate	17-EL-0006.E01 + .E02 + .Z01

This CB Test Certificate is issued by the National Certification Body

Electrosuisse
Luppmenstrasse 1
8320 Fehraltorf
SWITZERLAND

Signed by: Martin Plüss
Date: 2017-03-13

electro suisse

page 1 of 1

11.4 UL Certificate

CERTIFICATE OF COMPLIANCE

Certificate Number	UL-CA-L354430-31-22900202-1
Report Reference	E354430-20200922
Date	10-Feb-2022
Issued to:	NTI AG Bodenaeckerstr 2 SPREITENBACH 8957 Switzerland
This is to certify that representative samples of	NDMM8 - Incomplete Rotating Machines and Rotating Machine Parts Certified for Canada - Component See Addendum Page for Product Designation(s).
	Have been investigated by UL in accordance with the component requirements in the Standard(s) indicated on this Certificate. UL Recognized components are incomplete in certain constructional features or restricted in performance capabilities and are intended for installation in complete equipment submitted for investigation to UL LLC.
Standard(s) for Safety:	CSA C22.2 NO. 100, 7th Ed., Issue Date: 2014-07-01, Revision Date: 2017-04-01
Additional Information:	See the UL Online Certifications Directory at https://iq.ulprospector.com for additional information

This *Certificate of Compliance* does not provide authorization to apply the UL Recognized Component Mark. Only the UL Follow-Up Services Procedure provides authorization to apply the UL Mark.

Only those products bearing the UL Recognized Component Mark should be considered as being UL Certified and covered under UL's Follow-Up Services.

Look for the UL Recognized Component Mark on the product.

Bruce Mahrenholz, Director North American Certification Program

UL LLC

Any information and documentation involving UL Mark services are provided on behalf of UL LLC (UL) or any authorized licensee of UL. For questions, please contact a local UL Customer Service Representative at http://ul.com/aboutul/locations/

CERTIFICATE OF COMPLIANCE

Certificate Number	UL-US-L354430-11-22900202-1
Report Reference	E354430-20200922
Date	10-Feb-2022
Issued to:	NTI AG Bodenaeckerstr 2 SPREITENBACH 8957 Switzerland
This is to certify that representative samples of	NDMM2 - Incomplete Rotating Machines and Rotating Machine Parts - Component See Addendum Page for Product Designation(s). Have been investigated by UL in accordance with the component requirements in the Standard(s) indicated on this Certificate. UL Recognized components are incomplete in certain constructional features or restricted in performance capabilities and are intended for installation in complete equipment submitted for investigation to UL LLC.
Standard(s) for Safety:	UL 1004-1, 2nd Ed., Issue Date: 2012-09-19, Revision Date: 2020-11-05
Additional Information:	See the UL Online Certifications Directory at https://iq.ulprospector.com for additional information

This *Certificate of Compliance* does not provide authorization to apply the UL Recognized Component Mark. Only the UL Follow-Up Services Procedure provides authorization to apply the UL Mark.

Only those products bearing the UL Recognized Component Mark should be considered as being UL Certified and covered under UL's Follow-Up Services.

Look for the UL Recognized Component Mark on the product.

Bruce Mahrenholz, Director North American Certification Program

UL LLC

Any information and documentation involving UL Mark services are provided on behalf of UL LLC (UL) or any authorized licensee of UL. For questions, please contact a local UL Customer Service Representative at http://ul.com/aboutul/locations/

ALL LINEAR MOTION
FROM A SINGLE SOURCE

Europe / Asia Headquarters

NTI AG - LinMot & MagSpring
Bodenaeckerstrasse 2
CH-8957 Spreitenbach
Switzerland

Sales / Administration: +41 56 419 91 91
office@linmot.com

Tech. Support: +41 56 544 71 00
support@linmot.com

Web: https://www.linmot.com/

North / South America Headquarters

LinMot USA Inc.
N1922 State Road 120, Unit 1
Lake Geneva, WI 53147
USA

Sales / Administration: 262.743.2555
usasales@linmot.com

Tech. Support: 262.743.2555
usasupport@linmot.com

Web: https://www.linmot-usa.com/

Visit https://linmot.com/contact/ to find a distributor near you.

© 2026 NTI AG / LinMot Subject to alterations